©The Walt Disney Company

WALT DISNEY WORLD LAKE BUENA VISTA, FLORIDA

WDI—EPCOT

PROJECT MI
SFWMD PERMIT MODIFICATION

11/06/17

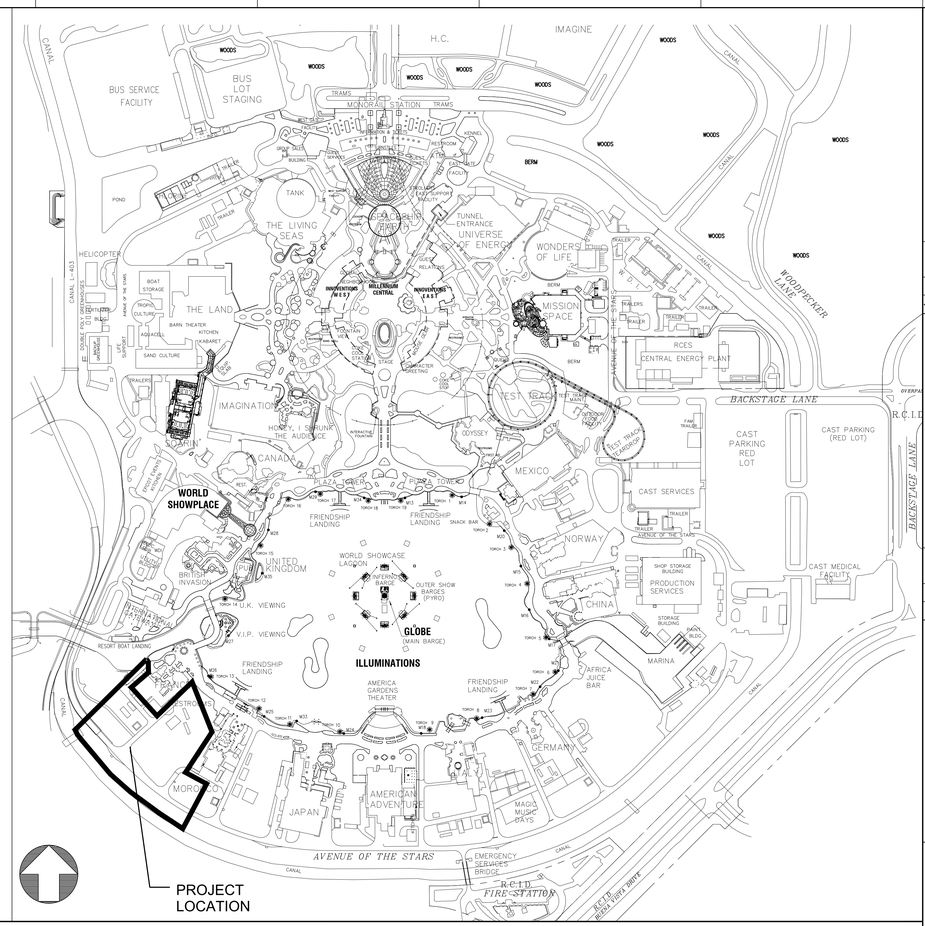

TOTAL SHEET COUNT: 11

INDEX OF DRAWINGS

SHEET NUMBER	ISSUE DATE	LAST REV.	REVISION ISSUE	SHEET TITLE
INDEX				
DISCIPLINE SHEET COUNT: 1				
ID-100	11/06/17			COVER, DRAWING INDEX SITE, LOCATION MAP
CIVIL				
DISCIPLINE SHEET COUNT: 10				
XC-101	11/06/17			EXISTING CONDITIONS
EC-101	11/06/17			EROSION CONTROL PLAN
C-001	11/06/17			GENERAL NOTES
C-201	11/06/17			OVERALL GRADING PLAN
C-202	11/06/17			OVERALL DRAINAGE PLAN
C-221	11/06/17			POND ENLARGEMENTS AND DETAILS
C-401	11/06/17			DETAILS
C-402	11/06/17			DETAILS
C-404	11/06/17			DETAILS
C-405	11/06/17			DETAILS

HEERY design
Heery International Inc.
100 East Pine St.,
Suite 300
Orlando, Florida 32801
407.992.6300
EB: 0000176
AA: 0002293
PROJECT # HI-170000

TO THE BEST OF MY KNOWLEDGE THESE DRAWINGS AND SPECIFICATIONS COMPLY WITH THE APPLICABLE BUILDING CODES.

SEAL

Reason: I have reviewed this document
Contact Info: kklueh@heery.com
Date: 2017.11.07 16:42:35-05'00'
Location: Printed copies of this document are not considered signed and sealed and the signature must be verified on any electronic copies.

PRINTED NAME: KEVIN C. KLUEH
REG. No. P.E. # 53568

NOTICES:
THE DATA IN THIS DOCUMENT INCORPORATE PROPRIETARY RIGHTS OF WALT DISNEY PARKS AND RESORTS U.S., INC. IT IS FURNISHED IN CONFIDENCE AND THE RECEIPT OF THIS DOCUMENT IS ACCEPTANCE THEREOF BY THE RECIPIENT AND ACCEPTANCE OF THE RIGHTS, NOTICE AND CONDITIONS HEREIN. THIS DOCUMENT MAY NOT BE REPRODUCED OR TRANSMITTED IN WHOLE OR IN PART WITHOUT THE EXPRESS WRITTEN CONSENT OF WALT DISNEY PARKS & RESORTS U.S., INC.
COPYRIGHT © 2017 WALT DISNEY PARKS AND RESORTS U.S., INC. ALL RIGHTS RESERVED.
UNAUTHORIZED USE PROHIBITED. THIS DOCUMENT MAY CONTAIN TRADE SECRETS AND MUST NOT BE DISCLOSED OR TRANSFERRED TO ANY THIRD PARTY WITHOUT THE PRIOR WRITTEN CONSENT OF WALT DISNEY PARKS & RESORTS U.S., INC.

Walt Disney Parks and Resorts U.S., Inc.
P.O. BOX 10000, LAKE BUENA VISTA, FLORIDA 32830-1000

REV.	BY	DATE	DESCRIPTION OF REVISIONS
1		11/06/17	SFWMD PERMIT MOD

ISSUED FOR

KEY PERSONS AND APPROVALS

DESIGN MANAGER: J. PARNELLA
DESIGNED BY: A. DAO
APPROVAL SIGNATURE
DRAWN: T. MCCLOUGH
CHECKED BY: K. KLUEH
APPROVED BY:
APPROVAL SIGNATURE
DATE: 11/06/17
E.F. No.: D-DISCIPLINED.DWG
Walt Disney Imagineering Division
1380 Reunion of the Dreams
Lake Buena Vista, FL 32830-0157
Architecture and Engineering

PROJECT DESIGNED FOR

PROJECT AREA: WDI-EPCOT
SITE NAME: PROJECT MI AREA DEVELOPMENT
BUILDING/ZONE: BAY LAKE, FL 32830
DRAWING TITLE: COVER, DRAWING INDEX, SITE, LOCATION MAP

PERMIT #: BD16-000
EDMS CODE: WFR09-04
PACKAGE: 1819-04 AREA DEVELOPMENT
DRAWING NO.: ID-100
REV#:

LEGEND:

FIELD LOCATED SYMBOLOGY

- PILING
- LIGHT POLE
- CATCH BASIN
- SHRUB / BUSH
- PALM TREE
- PINE TREE
- TREE
- MANHOLE
- LIGHT POST
- UTILITY POLE
- CENTER LINE
- FIRE HYDRANT
- IRRIGATION CONTROL VALVE
- JUNCTION BOX
- GROUND LIGHT
- WATER VALVE
- CLEAN OUT
- HOSE BIB
- CROWD CONTROL STANTION
- GROUND SPEAKER
- ELECTRIC OUTLET
- VAULT
- SPRINKLER
- COMMUNICATION JUNCTION BOX
- TLR REVISION NUMBER

********** NOTE **********

1) This survey is true and correct only for the area within the latest revision cloud and for the date shown hereon.
2) The information shown hereon was created from the best available plans, and merged with as-built information where available.
3) As-built utilities are denoted by flagged 3 decimal place coordinates.
4) Buildings and pavement shown hereon (in halftone shading) were created from best available plans or digitized aerial photography.
5) This information is provided strictly for area orientation, and should not be used for design.

SYMBOLOGY NOT FIELD LOCATED

- ANODE
- EMERGENCY VALVE
- METER REGULATOR
- REDUCER
- END CAP
- DRIP LEG
- TEST STATION
- MANHOLE
- STREET LIGHT
- VALVE
- CATCH BASIN
- TRANSFORMERS, VAULTS & PULL BOXES
- VALVE W/ CHECK VALVE
- CHECK VALVE
- FIRE HYDRANT
- POINT OF CONNECTION
- CLEAN OUT

ABBREVIATIONS

B/C	BACK OF CURB
BCR	BUILDING CORNER
BFP	BACK FLOW PREVENTER
BIG	BREAK IN GRADE
BOT	BOTTOM
CB	CATCH BASIN
CHR	CHILLED WATER RETURN
CHS	CHILLED WATER SUPPLY
CIP	CAST IRON PIPE
CJT	CONSTRUCTION JOINT
CLF	CHAIN LINK FENCE
CMH	COMMUNICATION MANHOLE
CMP	CORRUGATED METAL PIPE
COL	COLUMN
CDMH	COMMUNICATIONS DUCT BANK
CND	CONDUIT
CONC	CONCRETE
CV	CITY WATER
DF	DRINKING FOUNTAIN
DIP	DUCTILE IRON PIPE
DMH	DRAINAGE MANHOLE
DS	DOWN SPOUT
E/C	EDGE OF CONC
E/P	EDGE OF PAVEMENT
EXP	EXPANSION JOINT
ELEC	ELECTRIC
ELP	ELECTRICAL PANEL
FDR	FLOOR DRAIN
FFE	FINISHED FLOOR ELEVATION
F/C	FACE OF CURB
F/W	FACE OF WALL
FL	FLOW LINE
FM	FORCE MAIN
FO	FUEL OIL

ABBREVIATIONS

GRD	GROUND
HB	HOSE BIB
HTR	HIGH TEMP WATER RETURN
HTS	HIGH TEMP WATER SUPPLY
HRL	HANDRAIL
ICP	IRRIGATION CONTROL PANEL
INV	INVERT
IRR	IRRIGATION
KV	ELECTRIC LINE
MPG	MEDIUM PRESSURE GAS
MYRT	MYRTLE
O/H	OVERHANG
PBH	PHONE BOOTH
PMS	PAD MOUNTED SWITCH
PNT	POINTS
PVC	POLYVINYL CHLORIDE
PVT	PAVEMENT/ASPHALT
RCW	RECLAIMED WATER
RCP	REINFORCED CONCRETE PIPE
RET	RETAINING WALL
ROW	RIGHT-OF-WAY
SD	STORM DRAIN
SAN	SANITARY SEWER LINE
S/W	SIDEWALK
SMH	SANITARY SEWER MANHOLE
STP	STEEL PIPE
T/C	TOP OF CURB OR TOP OF CONCRETE
T/W	TOP OF WALL
TLR	TELEPHONE RISER
TR	TRANSFORMER
UD	UNDER DRAIN
VCP	VITRIFIED CLAY PIPE
WDK	WOOD DECK
WV	WATER VALVE

- WATER LINE
- FENCE LINE
- GUARD RAIL
- TREE OR BRUSH LINE
- UTILITIES (PER DESIGN)
- PAVEMENT (PER DESIGN)
- BUILDINGS (PER DESIGN)
- 1' CONTOUR
- 5' CONTOUR
- REVISED AREAS
- MOST UPLAND VETLAND LINE PHOTO INTERPALTED
- MOST UPLAND VETLAND LINE FIELD SURVEYED
- 25' VETLAND BUFFER

Vertical Datum is based on Disney's Datum referenced to the National Geodetic Vertical Datum of 1929 (NGVD29).

Conversion Equation:
NAVD88 = NAVD20 – 0.87 (FT)

SURVEY PROVIDED BY RCES.
HEERY ADDED INFORMATION AROUND THE EXISTING FRENCH BAKERY BASED ON OBSERVED CONDITIONS AND ORIGINAL DESIGN DOCUMENTS

30' 0 15' 30' 60'
(IN FEET)
1 inch = 30' ft.

HEERY design
Heery International Inc.
100 East Pine Street, Suite 500
Orlando, Florida 32801
407.992.6300
EB: 0000176
AA: 0002230
PROJECT # 00-170200

TO THE BEST OF MY KNOWLEDGE THESE DRAWINGS AND SPECIFICATIONS COMPLY WITH THE APPLICABLE BUILDING CODES.
SEAL

PRINTED NAME: KEVIN G. KLAUCH
REG. No. P.E. # 53560

NO.	BY	DATE	DESCRIPTION OF REVISIONS
1			
2			
3			
4			
5			
6			
7			
8			
9			

ISSUED FOR: SP/WMD PERMIT MOD — DATE: 11/06/17

NOTICES:
THE DATA IN THIS DOCUMENT INCORPORATE PREPARATORY REPORTS OF: GAIL FORNEY, PMP(R) PROFESSIONAL MAPPER, RCES, INC. 1000 SOUTH SEMORAN BLVD. ORLANDO, FL 32807 (407) 657-2483 AND ARE BASED ON FIELD SURVEYS PERFORMED BY THE ABOVE ENTITY. THE DATA IS DERIVED FROM FIELD SURVEYS, AERIAL PHOTOGRAPHY, AND OTHER SOURCES. CONTRACTORS SHALL VERIFY ALL CONDITIONS PRIOR TO CONSTRUCTION. CONTRACTOR SHALL VERIFY ALL CONDITIONS PRIOR TO THE COMMENCEMENT OF ANY CONSTRUCTION. CONTRACTOR SHALL REPORT ANY DISCREPANCIES OR ANOMALOUS DATA OR FIELD CONDITIONS THAT MAY BE DETRIMENTAL TO THE CONSTRUCTION PROCESS PRIOR TO ANY CONSTRUCTION.

Walt Disney Parks and Resorts U.S., Inc.
P.O. Box 10,000 Lake Buena Vista, Florida 32830-1000

KEY PERSONS AND APPROVALS

DESIGN ENGINEER: J. PARINELLA	CHECKED: M. MCLOUGHLIN
CIVIL ENGINEERING LEAD: A. CHO	CHECKED: K. KLAUCH
APPROVAL SIGNATURE:	APPROVAL SIGNATURE:
DATE: 11/06/17	E.R. No.: XC-101-SP/WMD/MOD

Walt Disney Imaginering. Division
1401 Flower Mound Road, Lake Buena Vista, Florida 32830-8001
Architecture and Engineering
© Disney

PROJECT DESIGNED FOR: EPCOT — Walt Disney World.

PROJECT AREA: WDI-EPCOT
UNIT NAME: PROJECT MI AREA DEVELOPMENT
806 ASCOT DRIVE, BAY LAKE, FL 32830
SHEET TITLE: EXISTING CONDITIONS

PERMIT #	EDMS CODE
BD16-000	WFR09-04
PACKAGE: 1819-04	AREA DEVELOPMENT
DRAWING NO.: XC-101	REV. NO.

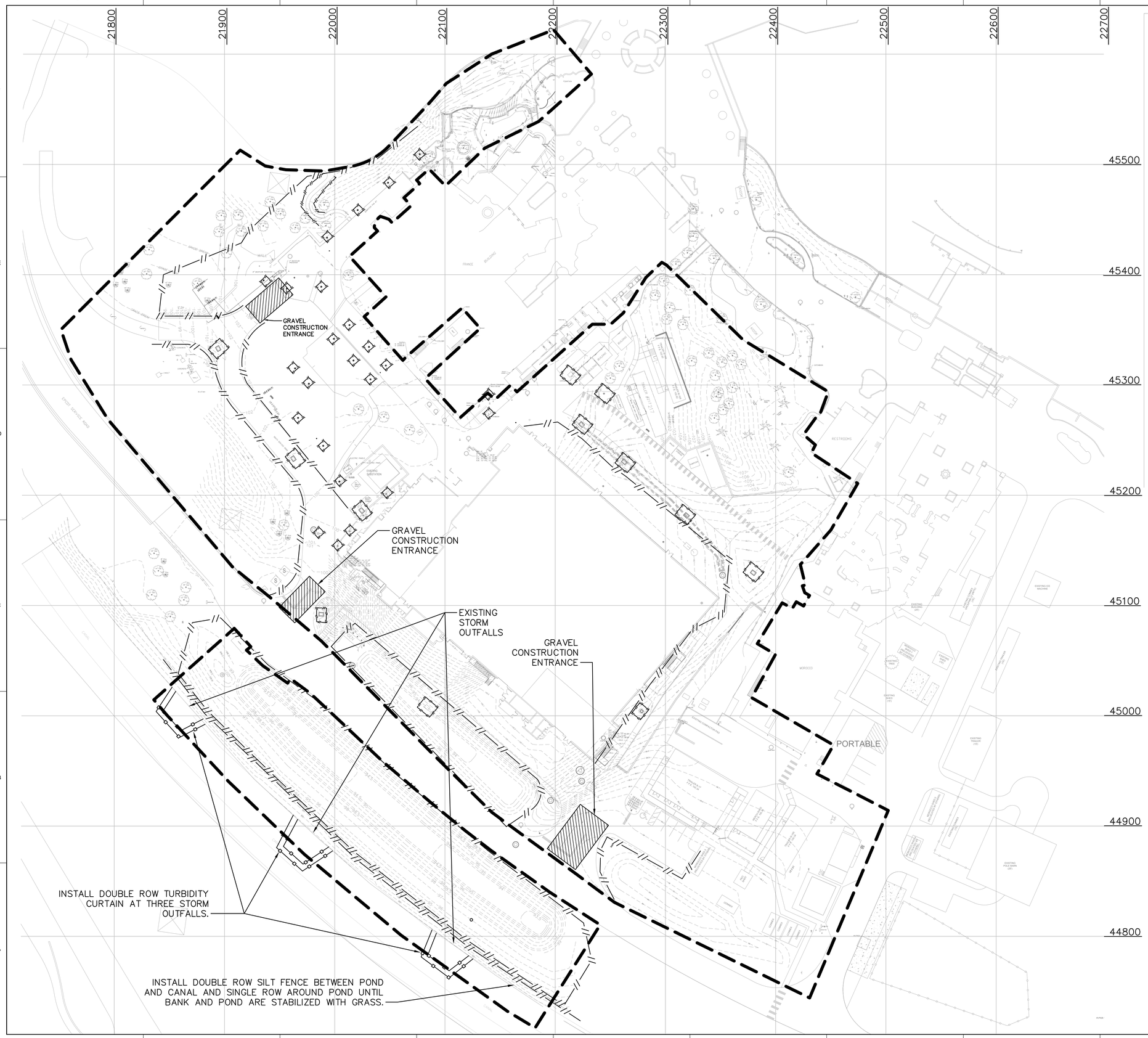

LEGEND:

- LIMIT OF WORK
- SILT FENCE (SINGLE OR DOUBLE ROW, SEE PLAN), SEE 1/ XC-203
- TURBIDITY CURTAIN, SEE 2/ XC-203
- X — GUARD POST OR TUBULAR MARKERS TO BE REMOVED
- x — SNOW FENCING FOR TREE CLUSTER PROTECTION
- SILT FENCE INLET PROTECTION, SEE 2/ C-402

NOTES:

1. CONTRACTOR SHALL COORDINATE PHASING AND SEQUENCING OF THE WORK WITH WDW REPRESENTATIVES.
2. FDOT TYPE III SILT FENCE SHALL BE CONSTRUCTED PRIOR TO EARTH MOVING ACTIVITIES. THE SILT FENCE SHALL ENCOMPASS ALL DISTURBED AREAS AND REMAIN IN PLACE UNTIL ALL CONSTRUCTION HAS CEASED AND DISTURBED AREAS STABILIZED.
3. ALL SURFACE WATER DISCHARGE FROM THIS SITE, INCLUDING DEWATERING DISCHARGE SHALL MEET STATE WATER QUALITY STANDARDS (LESS THAN 29 NTU ABOVE BACKGROUND) PRIOR TO REACHING ANY WATERS OF THE STATE INCLUDING WETLANDS.
4. INSPECT ALL EROSION AND SEDIMENTATION CONTROL STRUCTURES AT LEAST ONCE A WEEK AND WITHIN 24 HOURS AFTER THE END OF A STORM EVENT THAT IS 0.50 INCHES OR GREATER. COMPLETE A STORMWATER POLLUTION PREVENTION PLAN INSPECTION AND MAINTENANCE FORM AFTER EVERY INSPECTION.
5. CONSTRUCTION VEHICLE PATHS, WHICH ARE USED REGULARLY, WILL BE STABILIZED TO MINIMIZE TRANSPORT OF SEDIMENTS BY VEHICLES.
6. ALL EXCESS MATERIAL IS TO BE REMOVED FROM THE SITE AND PROPERLY DISPOSED BY THE CONTRACTOR.
7. ALL ON-SITE STORAGE OF MATERIALS IS SUBJECT TO THE APPROVAL OF THE SITE CONSTRUCTION MANAGER.
8. PROTECT EXISTING INLETS DURING CONSTRUCTION. MAINTAIN DRAINAGE ON THE SITE AT ALL TIMES DURING CONSTRUCTION.
9. VENTS, MANHOLES, VAULTS, ETC. SHALL BE DISPOSED OF AS DIRECTED.
10. CLEAN OUTS, WATER VALVES, ETC. SHALL REMAIN AND PROTECTED.
11. PROTECT OTHER ABOVE GROUND UTILITIES THAT ARE TO REMAIN DURING CONSTRUCTION.

HEERY design
Heery International Inc.
100 East Pine Street, Suite 300
Orlando, Florida 32801
(407) 843-8080
EB 0000176
AA 0002093
PROJECT # HI-170000

TO THE BEST OF MY KNOWLEDGE THESE DRAWINGS AND SPECIFICATIONS COMPLY WITH THE APPLICABLE BUILDING CODES.
SEAL

PRINTED NAME: KEVIN KLEIN
REG. No. P.E. #53566

REV.	APP.	DATE	DESCRIPTION OF REVISIONS
9			
8			
7			
6			
5			
4			
3			
2			
1		11/06/17	SFWMD PERMIT MOD

ISSUED FOR

NOTICE:
THE DATA IN THIS DOCUMENT INCORPORATE PROPRIETARY RIGHTS OF WALT DISNEY PARKS AND RESORTS U.S., INC. (WDPRS) AND THE DISNEY VACATION DEVELOPMENT, INC. (DVDI). ACCEPTANCE THIS DOCUMENT BOTH CONFIRMS YOUR ACCEPTANCE OF THE RESTRICTIONS SET FORTH HEREIN AND YOUR AGREEMENT TO USE THE INFORMATION CONTAINED IN THIS DOCUMENT FOR THE SPECIFIC PURPOSE SET FORTH BY WDPRS OR DVDI. UNAUTHORIZED USE OF THIS DOCUMENT MAY VIOLATE COPYRIGHT, TRADEMARK AND OTHER LAWS.

REVISIONS

KEY PERSONS AND APPROVALS

DESIGN MANAGER: J. PARINELLA	DRAWN: H. MCCLOOPER / INFRALIT
CONSTRUCTION MANAGER: A. DAO	CHECKED BY: K.KLEIN
APPROVAL SIGNATURE:	APPROVAL BY:
DATE: 11/06/17	F.P. NO.: EC-01-SFWMD.DWG

Imagineering Division
1200 Seminole Blvd. Suite 300
Lake Buena Vista, FL 32830-8151
Contractors and Engineering

PROJECT DESIGNATED FOR

EPCOT
Walt Disney World.

PROJECT AREA: WDI-EPCOT
SHEET NAME: PROJECT MI AREA DEVELOPMENT
SHEET DESCRIPTION: EROSION CONTROL PLAN

PERMIT #: BD16-000
EDMS CODE: WFR09-04
1819-04
PACKAGE: AREA DEVELOPMENT
DRAWING NO.: EC-101
REV#:

GENERAL NOTES

1. CONTRACTOR TO COORDINATE WITH UTILITY COMPANIES ON THE EXACT LOCATION OF EXISTING UNDERGROUND UTILITIES PRIOR TO ANY CONSTRUCTION ACTIVITY. CONTACT RCES FOR THE UTILITY LOCATE AT LEAST 2 FULL BUSINESS DAYS PRIOR TO BEGINNING EXCAVATION.

2. THE LOCATIONS OF ALL EXISTING UTILITIES AND STORM DRAINAGE SHOWN ON THE PLANS HAVE BEEN DETERMINED FROM AVAILABLE INFORMATION AND ARE GIVEN FOR THE CONVENIENCE OF THE CONTRACTOR. THE OWNER OR ENGINEER ASSUMES NO RESPONSIBILITY FOR ACCURACY. PRIOR TO THE START OF CONSTRUCTION, IT SHALL BE THE CONTRACTOR'S RESPONSIBILITY TO NOTIFY THE VARIOUS UTILITIES AND TO MAKE THE NECESSARY ARRANGEMENTS FOR ANY RELOCATION OF THESE UTILITIES WITH THE UTILITY COMPANY. THE CONTRACTOR SHALL EXERCISE CAUTION WHEN CROSSING ANY UNDERGROUND UTILITY. EXISTING UTILITIES, WHICH INTERFERE WITH THE PROPOSED CONSTRUCTION SHALL BE RELOCATED AS DIRECTED ON THE PLANS.

3. THE CONTRACTOR SHALL LOCATE AND VERIFY ALL HORIZONTAL AND VERTICAL LOCATIONS OF EXISTING UTILITIES PRIOR TO CONSTRUCTION. THE CONTRACTOR SHALL PROMPTLY NOTIFY THE ENGINEER OF ANY DISCREPANCIES PRIOR TO STARTING CONSTRUCTION.

4. ALL PROPERTY AFFECTED BY THIS WORK SHALL BE RESTORED TO A CONDITION EQUAL TO OR BETTER THAN EXISTED UNLESS SPECIFICALLY EXEMPTED BY THE PLANS. A 48-HOUR NOTICE WILL BE GIVEN TO RCES INSPECTORS PRIOR TO TESTING ANY UTILITY SHOWN ON THESE PLANS.

5. WHEN TRENCH EXCAVATION EXCEEDS 5 FEET IN DEPTH:
   A. CONTRACTOR SHALL CONFORM TO OSHA STANDARDS (29CFR SECTION 1926.650)
   B. THE CONTRACTOR SHALL PROVIDE WRITTEN ASSURANCE OF COMPLIANCE WITH ALL APPLICABLE LAWS.
   C. TRENCH SAFETY SYSTEM SHALL BE THE RESPONSIBILITY OF THE CONTRACTOR.

6. THE CONTRACTOR SHALL MAINTAIN A RECORD SET OF DRAWINGS AT THE JOB SITE. THESE PLANS SHALL BE SUBMITTED TO THE OWNER AT THE COMPLETION OF CONSTRUCTION. STORMWATER POND CONSTRUCTION, STORM SEWER PIPING, AND STORM SEWER STRUCTURES TO BE SURVEYED BY A REGISTERED SURVEYOR AT THE COMPLETION OF CONSTRUCTION.

EROSION AND SEDIMENT CONTROL

1. PREVENTION, CONTROL AND ABATEMENT OF EROSION, SEDIMENTATION, AND WATER POLLUTION SHALL BE IN ACCORD WITH STATE OF FLORIDA DEPARTMENT OF ENVIRONMENTAL PROTECTION CONSTRUCTION GENERAL PERMIT AND THE PROJECT'S STORMWATER POLLUTION PREVENTION PLAN.

2. EROSION CONTROL MEASURES SUCH AS SILT FENCE AND TEMPORARY DIVERSIONS SHALL BE INSTALLED AROUND THE ENTIRE PERIMETER OF THE SITE AND AT ALL INLETS TO PROVIDE CONTINUOUS PROTECTION FROM OFFSITE DISCHARGES.

3. THE ACCEPTABLE LEVEL OF TURBIDITY IS BACKGROUND PLUS 29 NTU OR LESS. BACKGROUND WATER QUALITY IS CONSIDERED TO BE 5 NTU UNLESS OTHERWISE NOTED BY RCID.

4. FILTER FABRIC FOR SILT BARRIERS SHALL BE SYNTHETIC MATERIAL, CONTAINING ULTRAVIOLET RAY INHIBITORS AND STABILIZERS TO PROVIDE A MINIMUM OF 6 MONTHS OF EXPECTED USABLE CONSTRUCTION LIFE AT A TEMPERATURE RANGE OF 0°F TO 120°F. FILTER FABRIC TO BE PERVIOUS SHEET OF POLYPROPYLENE, NYLON, POLYESTER, AND CERTIFIED BY MANUFACTURER OR SUPPLIER TO CONFORM TO SECTION 985 OF THE FDOT STANDARD SPECIFICATIONS FOR ROAD AND BRIDGE CONSTRUCTION, LATEST EDITION.

5. INCORPORATE PERMANENT EROSION CONTROL FEATURES INTO THE PROJECT AT THE EARLIEST PRACTICAL TIME. CORRECT CONDITIONS, USING TEMPORARY MEASURES, WHICH DEVELOP DURING CONSTRUCTION TO CONTROL EROSION PRIOR TO THE TIME IT IS PRACTICAL TO CONSTRUCT PERMANENT CONTROL FEATURES.

6. STAKED SILT FENCES:
   A. ERECT AROUND THE EXISTING INLETS IN ACCORD WITH DETAIL 1/EC-151.2
   B. SILT BARRIER SHALL BE STAKED TYPE WITH STAKES INSTALLED VERTICALLY.
   C. HEIGHT OF THE SILT BARRIER FABRIC SHALL BE A MINIMUM OF 15 INCHES AND A MAXIMUM OF 18 INCHES
   D. STAKE POSTS SHALL BE WOOD MEETING FDOT INDEX 102, TYPE III REQUIREMENTS AND SPACED A MAXIMUM OF 6 FEET APART AT BARRIER LOCATION AND DRIVEN SECURELY INTO THE GROUND.
   E. EXCAVATE A TRENCH APPROXIMATELY 4 INCHES WIDE X 4 INCHES DEEP ALONG THE LINE OF STAKES AND UPWARD OF INLET. TIE OR STAPLE FILTER FABRIC TO WOOD STAKES WITH 8 INCHES OF FABRIC EXTENDED INTO TRENCH. STAPLES SHALL BE HEAVY-DUTY WIRE, AT LEAST 1/2 INCHES LONG.
   F. BACKFILL TRENCH AND COMPACT SOIL OVER FILTER FABRIC. WHEN JOINTS ARE NECESSARY, FILTER FABRIC SHALL BE SPLICED TOGETHER ONLY AT A SUPPORT POST, WITH A 6 INCH OVERLAP, AND SECURELY SEALED.

7. WRITTEN APPROVAL OF THE EROSION CONTROL PLAN MUST BE RECEIVED FROM RCID BEFORE PROCEEDING WITH PROJECT CONSTRUCTION. APPROVAL OF THE PROPOSED PLAN BY RCID DOES NOT RELIEVE THE CONTRACTOR FROM MEETING ALL LOCAL, STATE, AND FEDERAL DISCHARGE STANDARDS.

8. CONTRACTOR SHALL NOTIFY RCID COMPLIANCE PERSONNEL OF THE PROJECT PRE-CONSTRUCTION MEETING PRIOR TO COMMENCEMENT OF CONSTRUCTION.

9. THE MEASURES SET FORTH IN THE EROSION CONTROL PLAN ARE INTENDED AS THE MINIMUM STANDARDS. ANY EROSION CONTROL MEASURE BEYOND THAT SPECIFIED IN THE PLAN, THAT IS REQUIRED TO COMPLY WITH LOCAL, STATE, AND FEDERAL LAW, SHALL BE IMPLEMENTED. ALL EROSION AND SEDIMENT CONTROL PRACTICES MUST BE IN ACCORDANCE WITH THE RCID LAND DEVELOPMENT REGULATIONS AND THE FLORIDA STORMWATER, EROSION, AND SEDIMENTATION CONTROL INSPECTORS HANDBOOK.

10. IN THE EVENT THAT EROSION PREVENTION AND CONTROL DEVICES SHOWN IN THE EROSION CONTROL PLAN PROVE NOT TO BE EFFECTIVE, ALTERNATE METHODS FOR MAINTAINING STATE WATER QUALITY STANDARDS FOR DISCHARGE FROM THE CONSTRUCTION SITE WILL BE REQUIRED. ALL ALTERNATE EROSION PREVENTION AND CONTROL DEVICES MUST BE REVIEWED AND APPROVED BY RCID DESIGNATED COMPLIANCE PERSONNEL PRIOR TO PLACEMENT.

11. ALL EROSION PREVENTION AND CONTROL MEASURES MUST BE INSPECTED AND APPROVED BY RCID DESIGNATED COMPLIANCE PERSONNEL PRIOR TO ANY CONSTRUCTION ACTIVITIES. REMOVAL OF THESE SAME EROSION CONTROLS AND PREVENTION MEASURES MAY BE DONE ONLY AFTER AUTHORIZATION IS OBTAINED FROM RCID DESIGNATED COMPLIANCE PERSONNEL. ANY DEVIATION FROM THIS PROCEDURE MAY RESULT IN AN IMMEDIATE REQUIREMENT FOR WORK STOPPAGE.

12. RCID DOES NOT ALLOW EARTHEN DITCH BLOCKS OR DAMS OR OTHER ERODIBLE MATERIAL TO BE PLACED IN LIVE STREAMS, CANALS, OR ACTIVE WATER BODIES. DITCH BLOCKS OR DAMS MUST BE COMPOSED OF NON-ERODIBLE MATERIALS. MATERIALS COMMONLY APPROVED BY RCID ARE SHEET PILES, PORTABLE COFFERDAMS, INFLATABLE WATER STRUCTURES, AND OTHER COMPARABLE DEVICES.

13. HAY BALES ARE NOT ALLOWED AS AN EROSION CONTROL DEVICE WITHIN THE REEDY CREEK IMPROVEMENT DISTRICT.

14. DAILY INSPECTIONS SHALL BE MADE BY THE CONTRACTOR OR ITS DESIGNEE TO DETERMINE THE EFFECTIVENESS OF SEDIMENT AND EROSION CONTROL EFFORTS. ANY NECESSARY REMEDIES SHALL BE PERFORMED WITHOUT DELAY. ALL SEDIMENT, EROSION, AND TURBIDITY CONTROL MEASURES SHALL BE IN WORKING CONDITION AT THE END OF EACH WORKDAY.

15. IT IS THE RESPONSIBILITY OF THE CONTRACTOR OR ITS DESIGNEE TO DEVELOP CONTINGENCY PLANS FOR DEALING WITH ALL WEATHER CONDITIONS, INCLUDING THE SEVERE RAIN EVENTS (MORE THAN TWO (2) INCHES IN FOUR (4) HOURS) WHICH MAY OCCUR REPEATEDLY DURING THE SUMMER MONTHS, AS SPECIFIED IN THE RCID LAND DEVELOPMENT REGULATIONS.

16. RCID MAY ELECT TO RESTRICT OR PROHIBIT CERTAIN EROSION CONTROL BEST MANAGEMENT PRACTICES DUE TO POOR PERFORMANCE OR BECAUSE THE DEVICE(S) MAY INCREASE ENVIRONMENTAL DEGRADATION. IT IS THE RESPONSIBILITY OF THE LANDOWNER OR ITS DESIGNEE TO INQUIRE ABOUT THESE RESTRICTIONS.

17. CONTRACTOR SHALL SUBMIT A TURBIDITY CONTROL PLAN WHERE WORK IS WITHIN 10 FT OF WATER BODIES AND/OR WETLAND LIMITS TO RCID COMPLIANCE FOR REVIEW AND APPROVAL PRIOR TO INSTALLATION OF STORM POND(S) OR TURBIDITY CURTAIN.

18. THE CONTRACTOR SHALL SUBMIT VIA BUZZSAW A SWPPP REPORT EVERY 7 DAYS AND 24 HOURS AFTER A RAIN EVENT EXCEEDING HALF AN INCH OF RAIN.

WDW ENVIRONMENTAL AFFAIRS DEWATERING PERMITTING

DEWATERING MAY BE REQUIRED. THE CONTRACTOR SHALL COMPLY WITH THE FOLLOWING WDW ENVIRONMENTAL AFFAIRS PERMITTING REQUIREMENTS.

FULLFILLMENT OF THIS PERMITTING REQUIREMENT SHOULD BEGIN AT LEAST THREE WEEKS PRIOR TO BEGINNING DEWATERING TO ENSURE THE CONSTRUCTION SCHEDULE IS NOT IMPACTED.

1. A GEOTECHNICAL CONSULTANT WILL INSTALL A PIEZOMETER AND COLLECT A GROUNDWATER SAMPLE MEETING THE REQUIREMENTS OF WDW ENVIRONMENTAL AFFAIRS. ANTICIPATE ONE WEEK TO INSTALL AND COLLECT SAMPLE.

2. THE GROUNDWATER SAMPLE WILL BE TRANSFERRED TO WDW ENVIRONMENTAL AFFAIRS FOR ANALYSIS. A PERMIT WILL BE ISSUED IF THE SAMPLE MEETS REGULATORY REQUIREMENTS. ANTICIPATE THIS TESTING SHALL REQUIRE TWO WEEKS.

RCID REQUIRED INFORMATION FOR DEWATERING PERMITTING

IF DEWATERING IS REQUIRED, THE CONTRACTOR SHALL APPLY FOR A DEWATERING PERMIT FROM RCID COMPLIANCE. THE DEWATERING PERMIT APPLICATION SHALL BE SUBMITTED TO RCID COMPLIANCE THROUGH THE PLANNING AND ENGINEERING DEPARTMENT'S BUZZSAW PERMITTING SYSTEM.

THE CONTRACTORS WILL SUBMIT THE FOLLOWING INFORMATION AS PART OF THEIR DEWATERING PERMIT NOTIFICATION AT LEAST 21 DAYS PRIOR TO COMMENCEMENT OF ANY DEWATERING ACTIVITIES, AND NOT BEGIN DEWATERING UNTIL THE DISTRICT HAS APPROVED THE PROPOSED ACTIVITY.

1. NAME OF CONTRACTOR;
2. SITE LOCATION PLAN SHOWING TASK SPECIFIC DEWATERING LOCATIONS;
3. RECORDS THAT INDICATE THE PRESENCE OR ABSENCE OF KNOWN AREAS OF CONTAMINATION WITHIN THE PROJECT, AND IN ADJACENT AREAS THAT COULD BE IMPACTED IF DEWATERING OPERATIONS ARE PERFORMED;
4. PROPOSED METHODS OF CONSTRUCTION;
5. ESTIMATED PUMPING RATES AND DURATION OF PUMPING;
6. KNOWN VOLUME TO BE DISCHARGED FROM VESSELS INSTALLED IN THE WET;
7. ESTIMATED DEPTH OF DRAWDOWN;
8. ANTICIPATED RADIUS OF THE CONE INFLUENCE;
9. PROPOSED POINTS OF DISCHARGE;
10. SITE WATER ROUTING FROM EXCAVATION TO STORMWATER RETENTION AREA;
11. PROPOSED GROUNDWATER AND SURFACE WATER MONITORING PLANS;
12. ANY OTHER SITES AND TASKS SPECIFIC CHARACTERISTICS WORTHY OF CONSIDERATION;
13. HYDRAULIC INFORMATION (I.E., NORMAL POOL AND SEASONAL HIGH WATER ELEVATIONS) OF ANY WETLANDS AND SURFACE WATERS WITHIN OR ADJACENT TO THE PROPOSED DEWATERING ACTIVITIES.

THE CONTRACTOR SHALL SUBMIT VIA BUZZSAW A SWPPP REPORT EVERY 7 DAYS AND 24 HOURS AFTER A RAIN EVENT EXCEEDING HALF AN INCH OF RAIN.

STORM SEWERS

1. REINFORCED CONCRETE PIPE FOR PIPE DIAMETERS 15 INCH AND LARGER. CONFORM TO ASTM C76/C443 WITH D LOADS. POLYVINYL CHLORIDE (PVC) PIPE AND FITTINGS FOR GRAVITY SEWER MAINS 12" DIAMETER AND SMALLER, LATERALS AND STUBS SHALL CONFORM TO ASTM 3034, SDR35.
2. CLEAN-OUTS SHALL BE PROVIDED IN EACH SERVICE LATERAL, AT ALL WYES AND TEES AND AT ALL CHANGES IN DIRECTION AS SHOWN ON THE SEWER DETAIL SHEET. CLEAN-OUTS SHALL BE THE SAME DIAMETER AS THE SERVICE LATERAL.
3. TEST NEW PIPING SYSTEMS, AND PARTS OF EXISTING SYSTEMS THAT HAVE BEEN ALTERED, EXTENDED, OR REPAIRED, FOR LEAKS AND DEFECTS AS NOTED IN THE SPECIFICATIONS.

WATER LINES

1. UNDERGROUND DOMESTIC WATER LINE PIPING SMALLER THAN 4-INCH DIAMETER SHALL CONFORM TO ASTM D2241, SDR21, WITH I.P.S. DIMENSIONS, AND MANUFACTURED FROM PVC 1120.
2. UNDERGROUND DOMESTIC WATER LINE PIPING 4" DIAMETER AND LARGER SHALL BE AWWA C900 CLASS 200 (DR14), MECHANICAL JOINTS WITH RESTRAINING GLANDS. RESTRAINING GLANDS SHALL BE SPECIFICALLY DESIGNED FOR USE WITH C900 PVC PIPE AND SHALL BE EBAA IRON 2000PV OR 3000 SERIES, ROMAC GRIP-RING, SIGMA PV-LOK, TYLER MJR, STARGRIP SERIES 4000 AND SERIES 4100P OR APPROVED EQUALS.
3. BACKFLOW PREVENTERS SHALL BE FEBCO, WATTS, OR WILKINS/ZURN.
4. VALVES 4" DIA AND LARGER SHALL BE MUELLER, CLOW, DRESSER, KENNEDY OR STOCKHAM, AWWA APPROVED, 200 LB
5. FIRE LINES: AWWA C900 PVC DR-14 CLASS 300.
6. SERVICE SADDLES OR TAPPING SLEEVES SHALL BE USED FOR ALL POTABLE WATER SERVICE TAPS. SIZE-ON-SIZE TAPS USING TAPPING SADDLES OR SLEEVES WILL NOT BE PERMITTED
7. VALVE BOXES. VALVE BOXES FOR POTABLE WATER SERVICE SHALL BE ADJUSTABLE, CAST IRON SUITABLY SIZED FOR THE SIZE AND DEPTH OF THE BURIED VALVE. ALL VALVE BOXES SHALL BE DESIGNED FOR TRAFFIC BEARING H-20 WHEEL LOADING WITH ROUND CAST IRON LIDS MARKED "WATER". VALVE BOXES SHALL BE TYLER MODEL 6850/6860, U.S. FOUNDRY MODEL 7500, AMERICAN FLOW CONTROL'S TRENCH ADAPTER OR APPROVED EQUAL.
8. MECHANICAL PIPE RESTRAINING MECHANISMS FOR PUSH-ON OR MECHANICAL JOINTS WILL BE USED.
9. THOROUGH FLUSHING IS REQUIRED PRIOR TO HYDROSTATIC PRESSURE TESTING; FLUSHING SHALL BE ACCOMPLISHED BY PARTIALLY OPENING VALVES AND FIRE HYDRANTS SEVERAL TIMES UNDER ACTUAL LINE PRESSURES WITH PIPELINE VELOCITIES OF NOT LESS THAN 3.0 FEET PER SECOND IN THE LARGEST LINE SIZE TO BE FLUSHED.
10. CONTRACTOR TO COORDINATE WITH RCES AND WDW THE LOCATION WHERE WATER USED FOR FLUSHING IS DISHARGED. RCES WILL REQUIRE ADVANCED NOTICE IF SUPERCHLORINATED WATER IS DISCHARGED TO THE SANITARY SEWER.
11. HYDROSTATIC PRESSURE AND LEAKAGE TESTING OF WATER MAINS SHALL BE
    A. PERFORMED IN ACCORDANCE WITH SECTION 4 OF AWWA C600 EXCEPT AS MODIFIED
    B. ALL TESTING SHALL BE MADE USING ONLY POTABLE WATER. AIR TESTING SHALL NOT BE PERMITTED. THE REQUIRED PRESSURE FOR THE FIELD HYDROSTATIC PRESSURE TEST SHALL BE TWO (2) TIMES THE WORKING PRESSURE AT THE POINT OF TESTING, BUT IN NO CASE SHALL THE TEST BE LESS THAN 200 PSI, WITH NO PRESSURE LOSS.
    C. ALLOWABLE LEAKAGE IS 0.
12. PRIOR TO PLACING THE WATER SYSTEM IN SERVICE, ALL POTABLE WATER PIPELINES SHALL BE CHLORINATED IN ACCORDANCE WITH AWWA C-651, "AWWA STANDARD FOR DISINFECTING WATER MAINS" AND THE REQUIREMENTS OF CHAPTER 62-555 FAC. THE LOCATION OF THE SAMPLING POINTS AND CHLORINATION POINTS SHALL BE DETERMINED BY THE OWNER'S REPRESENTATIVE AND SHALL INCLUDE ALL LOCATIONS REFERENCED IN THE REQUIRED PERMITS. ALL TAPS FOR CHLORINATION AND SAMPLING SHALL BE UNCOVERED AND BACKFILLED BY THE CONTRACTOR AT NO ADDITIONAL EXPENSE TO THE OWNER.

SANITARY SEWER

1. POLYVINYL CHLORIDE (PVC) PIPE AND FITTINGS FOR GRAVITY SANITARY SEWER MAINS, LATERALS AND STUBS SHALL CONFORM TO ASTM 3034, SDR35. PVC PIPE SHALL HAVE INTEGRAL WALL THICKENED BELLS OR EXTRUDED COUPLINGS WITH GASKET SEALS. SOLVENT WELD JOINTS WILL NOT BE PERMITTED. PVC PIPE JOINTS SHALL BE RUBBER GASKET PUSH-ON JOINTS.
2. SANITARY FORCE MAIN PIPING SHALL BE HDPE PE4710 PIPE, PRESSURE CLASS 200 PSI, DR 11 PER AWWA C901-08 OR HDPE PE3608 PIPE PRESSURE CLASS 200 PSI, DR 9 PER AWWAA C901-08 AND AWWA C906-07A, GREEN, BROWN OR WHITE PIGMENTED.
3. CLEAN-OUTS SHALL BE PROVIDED IN EACH SERVICE LATERAL, AT ALL WYES AND TEES AND AT ALL CHANGES IN DIRECTION AS SHOWN ON THE SEWER DETAIL SHEET. CLEAN-OUTS SHALL BE THE SAME DIAMETER AS THE SERVICE LATERAL.
4. LEAKAGE TESTS BY EXFILTRATION AND/OR INFILTRATION, AS DESCRIBED SHALL BE PERFORMED ON ALL SEWER LINES IN THE SYSTEM. THE MAXIMUM ALLOWABLE INFILTRATION/ EXFILTRATION SHALL BE 100 GALLONS PER DAY/PER INCH OF PIPE DIAMETER/PER MILE OF PIPELINE, EXCEPT THAT AN ALLOWANCE OF AN ADDITIONAL 10 PERCENT OF GALLONAGE WILL BE ACCEPTED FOR EACH ADDITIONAL 2-FEET OF HEAD OVER A BASIC 2-FEET MINIMUM INTERNAL PRESSURE HEAD. AN EXFILTRATION TEST SHALL BE CONDUCTED ONLY IF THE GROUNDWATER TABLE WITHIN THE TEST SECTION IS BELOW THE PIPELINE INVERT ELEVATION.
5. RCID MAY REQUIRE ADDITIONAL MANDREL TESTING OR TV INSPECTION TO ADDRESS ANY DEFICIENCIES IN TESTING RESULTS.

UNDERGROUND UTILITY MARKING

1. PIPE DETECTING WIRE FOR NON-METALLIC PIPE: A 12-GAUGE THHN COPPER DETECTING WIRE SHALL BE ATTACHED TO THE PIPE AT THE 12 O'CLOCK POSITION
2. MARKING TAPE: REINFORCED OR UNREINFORCED TYPE, 6 INCH WIDE, INERT, VIRGIN RESIN, PLASTIC FILM FORMULATED FOR EXTENDED USE UNDERGROUND, IMPRINTED WITH AN APPROPRIATE LEGEND TO DEFINE TYPE OF UTILITY LINE IT IDENTIFIES.
3. COLOR CODE: BLACK LETTERING ON COLOR BACKGROUNDS IN ACCORD WITH APWA/ULCC UNIFORM COLOR CODE AND ANSI Z53.1, EXCEPT AS FOLLOWS.
   A. RED: ELECTRIC POWER DUCTBANKS .
   B. YELLOW: NATURAL GAS DISTRIBUTION AND TRANSMISSION.
   C. BLACK OR WHITE LETTERING ON BLUE BACKGROUND: POTABLE AND NONPOTABLE WATER SYSTEMS.
   D. BLACK OR WHITE LETTERING ON BROWN BACKGROUND: SANITARY AND STORM SEWER FORCE MAINS.
   E. BLACK OR YELLOW LETTERING ON PANTONE 522C PURPLE BACKGROUND: RECLAIMED WATER LINES.
   F. BLACK LETTERING ON LIGHT BLUE BACKGROUND: COMPRESSED AIR SYSTEMS.
   G. BLACK LETTERING ON GREEN BACKGROUND WITH BROWN BAND STRIPING: CHILLED WATER SYSTEMS
   H. BLACK LETTERING ON SILVER BACKGROUND WITH ORANGE BAND STRIPING: HOT WATER SYSTEM

EARTHWORK

1. PROTECT ALL ACTIVE UTILITY LINES ON-SITE.
2. EXPEDITIOUSLY REPAIR UTILITIES DAMAGED DURING CONSTRUCTION AT NO COST TO OWNER. EFFECTIVELY DUST-PALLIATE WORKING AREA, UNPAVED ROADS, AND INVOLVED PORTIONS OF THE SITE.
3. MAXIMUM DRY DENSITY OF BACKFILL MATERIALS SHALL BE DETERMINED BY ASTM D1557, PROCEDURE A.
4. FIELD DENSITY TESTS SHALL BE DETERMINED BY ASTM D1556, ASTM D2922, OR ASTM D2937.
5. CONTRACTOR IS RESPONSIBLE FOR TEMPORARY BYPASS PUMPING OF WATER IN SUCH A MANNER AS NOT TO CREATE A NUISANCE, CAUSE DAMAGE TO PROPERTY, OR INTERFERE WITH ACTIVITIES OF OTHER CONTRACTORS. PREVENT WATER FROM MIGRATING OUTSIDE OF CONSTRUCTION AREAS. USE OWNER-APPROVED METHODS AND MATERIALS TO CONFINE.
6. SUBGRADE PREPARATION
   A. SCARIFY AND PROOF ROLL SUBGRADE SURFACE TO A DEPTH OF 6 INCHES TO IDENTIFY SOFT SPOTS.
   B. CUT OUT SOFT AREAS OF SUBGRADE NOT CAPABLE OF COMPACTION IN PLACE. BACKFILL WITH GENERAL FILL.
   C. COMPACT SUBGRADE TO DENSITY EQUAL TO OR GREATER THAN 95 PERCENT OF THE MATERIALS ASTM D-1557 MAXIMUM DRY DENSITY FOR A DEPTH OF ONE FOOT.
   D. PLACE EARTH FILL AND BACKFILL IN LAYERS THAT WILL UNIFORMLY COMPACT TO REQUIRED DENSITIES, BUT IN LOOSE LAYERS NOT MORE THAN 8 IN. THICK.
   E. BRING EACH LAYER TO WITHIN ±4% OF OPTIMUM MOISTURE CONTENT BEFORE COMPACTION. ADD WATER BY UNIFORM SPRINKLING. JETTING AND FLOODING ARE PROHIBITED. ADD AND BLEND ADDITIONAL FILL MATERIALS OR DRY OUT EXISTING MATERIALS AS REQUIRED.
   F. WHEN MOISTURE CONTENT AND CONDITION OF EACH LAYER IS SATISFACTORY, COMPACT TO NOT LESS THAN 95% OF MAXIMUM DRY DENSITY IN ACCORD WITH ASTM D1557. IF TESTS INDICATE WORK DOES NOT MEET SPECIFIED REQUIREMENTS, REMOVE WORK,
   G. REPLACE AND RETEST. FREQUENCY OF TESTS: IN-PLACE DENSITY OF BACKFILL MATERIALS PLACED AND
   H. COMPACTED; ONE TEST FOR EVERY 100 CU. YD. OF MATERIAL PLACED AND ONE TEST FOR EACH 1 FT. VERTICAL LIFT.

ALL WORK SHALL CONFORM TO THE FOLLOWING BUILDING CODES:

BUILDING:	EPCOT BUILDING CODE	EDITION: 2015 WITH 2016 & 2017 SUPPLEMENT
MECHANICAL:	EPCOT MECHANICAL CODE	EDITION: 2015 WITH 2016 SUPPLEMENT
PLUMBING:	EPCOT PLUMBING CODE	EDITION: 2015 WITH 2016 & 2017SUPPLEMENT
FUEL GAS:	EPCOT FUEL GAS CODE	EDITION: 2015 WITH 2016 SUPPLEMENT
ELECTRICAL:	EPCOT ELECTRICAL CODE	EDITION: 2015 WITH 2016 SUPPLEMENT
FIRE:	EPCOT FIRE PREVENTION CODE	EDITION: 2015 WITH 2016 & 2017 SUPPLEMENT
	FLORIDA FIRE PREVENTION CODE	EDITION: 5TH 2014
ADA:	EPCOT ACCESSIBILITY CODE	EDITION: 2015 WITH 2016 SUPPLEMENT
	FLORIDA ACCESSIBILITY CODE, ADAAG 2010	EDITION: 5TH 2014
ENERGY:	EPCOT ENERGY EFFICIENCY CODE	EDITION: 2015 WITH 2016 SUPPLEMENT
SITE UTILITIES	ALL UTILITY WORK SHALL CONFORM TO RCES STANDARDS AND SPECIFICATIONS, LATEST EDITION	

LEGEND:

	NEW	EXISTING
POTABLE WATER	CW	(CW)
GAS	GAS	(GAS)
STORM DRAIN	D	(D)
SANITARY SEWER	S	(S)
ELECTRICAL	E	(E)
12KV ELECT	12k	(12k)
FIRE	F	(F)
UNDERDRAIN	UD	(UD)
CHILLED WATER SUPPLY	CHS	(CHS)
CHILLED WATER RETURN	CHR	(CHR)
AIR LINE	A	(A)
LOW TEMP WATER	LTW	(LTW)
LOW TEMP WATER RETURN	LTWR	(LTWR)
LOW TEMP WATER RETURN		
MANHOLE		
STORM INLET		
STORM INLET		
CLEAN OUT	C.O.	
FIRE DEPARTMENT CONNECTION		
FIRE HYDRANT		
BACKFLOW PREVENTER		
BACKFLOW PREVENTER W / FDC		
CHECK VALVE		
TRANSFORMER	T	
SWITCH	S	
ELECTRICAL PAD		
ELECTRICAL PANEL		

CIVIL SHEETS ARE BROKEN DOWN BY SERIES AS FOLLOWS:

XC-100 EXISTING CONDITIONS

EC-100 EROSION CONTROL PLANS
EC-150 EROSION CONTROL DETAILS

C-001 GENERAL NOTES
C-100 LOCATION PLANS AND TRUCK ACCESS
C-150 LOCATION PLAN DETAILS
C-200 GRADING
C-300 CIVIL UTILITY PLANS
C-350 CIVIL UTILITY DETAILS

M-300 MECHANICAL UTILITY PLANS
M-310 MECHANICAL ENLARGED PLANS
M-350 MECHANICAL UTILITY DETAILS

PHASE OF THE PROJECT IS INDICATED BY SHEET NUMBER SUFFIX

.2 PHASE 2 CORE AND SHELL PACKAGE
.4 PHASE 4 AREA DEVELOPMENT PACKAGE

HEERY design
Heery International/Inc.
Suite 300, One Pine Street,
Orlando, Florida 32801
407 992-6300
EB: 0000176
AA: 0002293
PROJECT # HI-170000

TO THE BEST OF MY KNOWLEDGE THESE DRAWINGS AND SPECIFICATIONS COMPLY WITH THE APPLICABLE BUILDING CODES.
SEAL

PRINTED NAME: KEVIN G. KLUCH
REG. No. P.E. # 53568

REV.	APP.	DATE	DESCRIPTION OF REVISIONS
1			
2			
3			
4			
5			
6			
7			
8			
9			

ISSUED FOR
SFWMD PERMIT MOD 11/06/17

NOTICES:
THE DATA IN THIS DOCUMENT INCORPORATES PROPRIETARY RIGHTS OF WALT DISNEY PARKS AND RESORTS U.S., INC. IT IS FURNISHED IN CONFIDENCE AND THE RECEIVER BY ACCEPTING THIS DOCUMENT AGREES THAT IT SHALL NOT BE REPRODUCED OR DISCLOSED TO OTHERS WITHOUT THE WRITTEN CONSENT OF WALT DISNEY PARKS AND RESORTS U.S., INC.
THIS DOCUMENT IS LOANED FOR THE LIMITED PURPOSE OF BIDDING OR MANUFACTURING PURPOSES UNDER CONTRACT WITH WALT DISNEY PARKS AND RESORTS U.S., INC. AND ITS AFFILIATES. THE RECEIVER BY ACCEPTING THIS DOCUMENT AGREES THAT HE WILL NOT USE IT FOR ANY OTHER PURPOSE THAN THAT STATED ABOVE, NOR DUPLICATE IT IN WHOLE OR IN PART, NOR DISCLOSE THE CONTENTS HEREOF TO ANY OTHER PERSON WHOSE USE THEREOF IS NOT CONSISTENT WITH THE ABOVE STATED PURPOSE.

Walt Disney Parks and Resorts U.S., Inc.
P.O. Box 10000, Lake Buena Vista, Florida 32830-1000

KEY PERSONS AND APPROVALS
DESIGN MANAGER: J. PARNELLA
CHIEF ENGINEER: A. DAO
APPROVAL SIGNATURE
DRAWN: H. VASQUEZ-RIVIN
CHECKED: K. KLUCH
APPROVED BY:
APPROVAL SIGNATURE
DATE: 11/06/17
L.F. No.: L3DSCIVIBDWG

Walt Disney Imaginering Division
1380 Avenue of the Vista
Lake Buena Vista, FL 32830-0201
Architecture and Engineering

PROJECT DESIGNED FOR
EPCOT Walt Disney World

PROJECT AREA: WDI-EPCOT
SHEET NAME: PROJECT MI AREA DEVELOPMENT
BID/ADJUST DRIVE, BAY LAKE, FL 32830
SHEET TITLE: GENERAL NOTES

PERMIT #: BD16-000
EDMS CODE: WFR09-04
PACKAGE: 1819-04 AREA DEVELOPMENT
DRAWING NO.: C-001.4
REV#:

LEGEND

—101—	PROPOSED CONTOURS
+ 99.05	PROPOSED SPOT ELEVATION
BS	BOTTOM OF SWALE
ME	MATCH EXISTING GRADE
M.E.S.	MITERED END SECTION
HP	HIGH POINT

30' 0 15' 30' 60'
(IN FEET)
1 inch = 30' ft.

HEERY design
Heery International Inc.
100 East Pine Street,
Suite 500
Orlando, Florida 32801
407 992 6300
EB 0000176
AA 0002220
PROJECT # 00-170200

TO THE BEST OF MY KNOWLEDGE THESE DRAWINGS AND SPECIFICATIONS COMPLY WITH THE APPLICABLE BUILDING CODES.
SEAL

PRINTED NAME: KEVIN G. KLUEH
REG. No. P.E. # 53560

NO.	DATE	DESCRIPTION OF REVISIONS
9		
8		
7		
6		
5		
4		
3		
2		
1	11/06/17	SFWMD PERMIT MOD

ISSUED FOR

NOTICES:
THE DATA IN THIS DOCUMENT INCORPORATE PROPRIETARY REPORTS OF WALT DISNEY PARKS AND RESORTS U.S., INC. (WDPRS) AND ARE PROVIDED TO THE RECIPIENT FOR INFORMATION PURPOSES ONLY. THE RECIPIENT IS PERMITTED TO DISCLOSE THE INFORMATION TO THOSE EMPLOYEES, CONTRACTORS AND SUBCONTRACTORS WHO NEED THE INFORMATION TO PERFORM WORK ON A PROJECT OWNED BY WDPRS. THE INFORMATION MAY NOT BE DISCLOSED TO ANY OTHER PERSON OR ENTITY.
CONTRACTOR SHALL VERIFY ALL CONDITIONS TO BE SHOWN ON THE WORK OF ANY PRECEDING TRADE AND REPORT ANY DISCREPANCIES OR DAMAGES BEFORE PROCEEDING WITH ANY CONSTRUCTION.

Walt Disney Parks and Resorts U.S., Inc.
P.O. Box 10,000 Lake Buena Vista Florida 32830-1000

KEY PERSONS AND APPROVALS

DESIGNED BY	J. PARINELLA	H McGLOUGHLIN
CIVIL ENGINEERING LEAD	A. DIAZ	K. KLUEH
PROJECT ARCHITECT	A. DIAZ	
DATE	11/06/17	
F.E. No.	C-211.DWG	

INITIALS
APPROVAL SIGNATURE

Walt Disney Imaginering Design Division
Architecture and Engineering
Florida
1380 Avenue of the Pines
Lake Buena Vista, Florida 32830-8021

PROJECT DESIGNED FOR:
EPCOT
Walt Disney World

PROJECT AREA: WDI-EPCOT
UNIT NAME: PROJECT MI AREA DEVELOPMENT
BIG ACCOT DRIVE, BAY LAKE, FL 32830
SHEET TITLE: OVERALL GRADING PLAN

PERMIT # BD16-000
EDMS CODE WFR09-04
PACKAGE 1819-04 AREA DEVELOPMENT
DRAWING NO. C-201
REV NO.

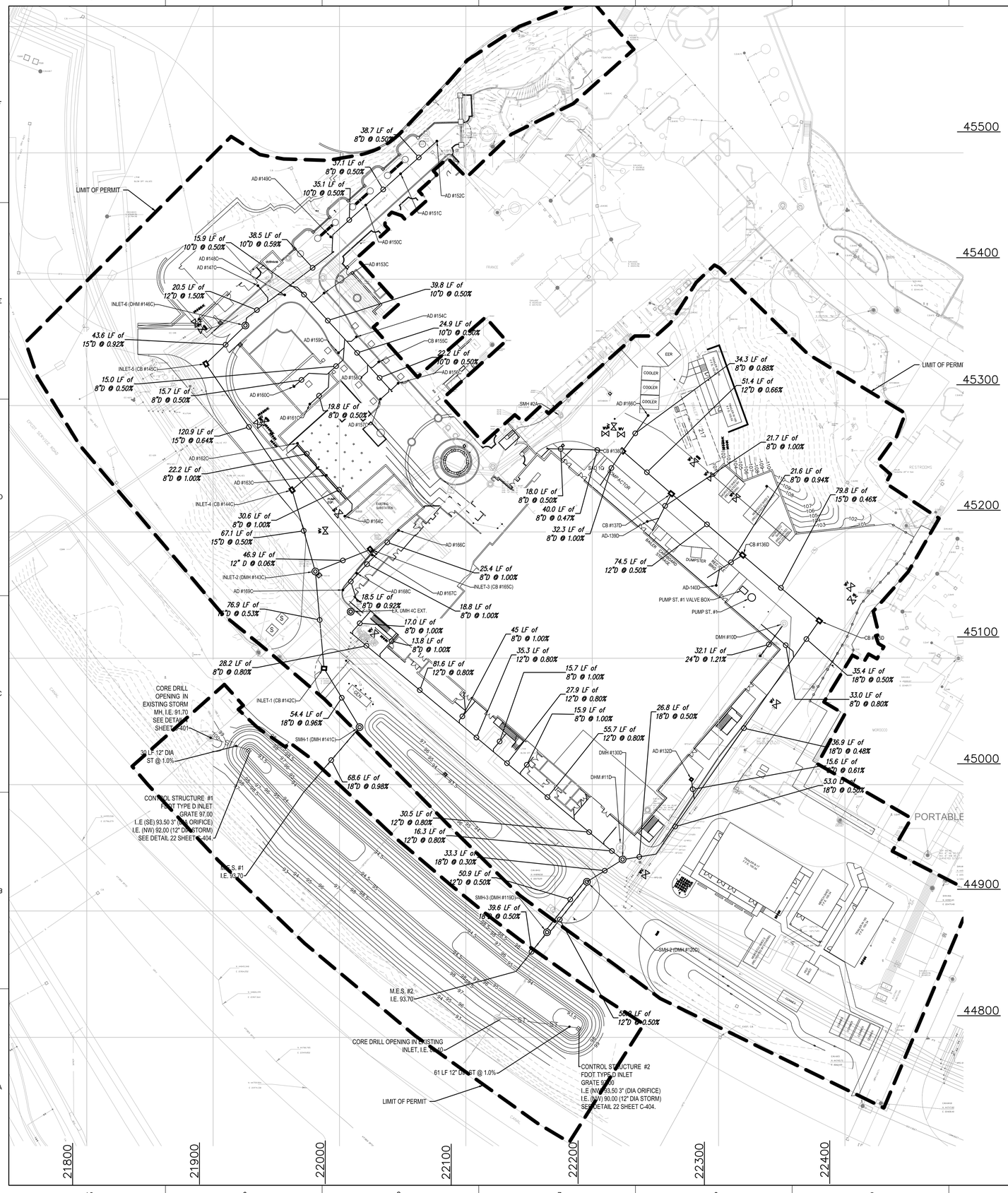

STRUCTURE TABLE - EXISTING			
STRUCTURE NAME:	DETAILS:	PIPES IN:	PIPES OUT
DHM #3C	(4' DMH) RIM = 100.23 N: 45237.91 E: 22119.38	24" INV: 94.36 (NE) 10" INV: 92.02 (NW)	30" INV: 91.74 (SW) 10" INV: 96.88 (N)
DMH #4C	(4' DMH) RIM = 97.48 N: 45136.79 E: 22008.83	30" INV: 91.18 (NE) 18" INV: 92.44 (NW)	30" INV: 84.60 (SW)
DMH #6D	(4' DMH) RIM = 99.50 N: 45101.60 E: 22332.90	18" INV: 92.63 (SE)	24" INV: 91.29 (SW)
DMH #7D	(4' DMH) RIM = 98.25 N: 44979.88 E: 22243.77	24" INV: 90.69 (NE) 2" INV: 94.89 (SE)	30" INV: 84.49 (SW)
SMH #1	(5' SMH) RIM = 103.68 N: 45401.27 E: 21986.90	6" INV: 96.72 (NE)	6" INV: 96.62 (SE)
SMH #2	(5' SMH) RIM = 100.80 N: 45251.61 E: 22121.41	6" INV: 95.21 (NW) 8" INV: 96.84 (W) 4" INV: 95.50 (SE)	8" INV: 95.04 (NE)
SMH #2A	(4' SMH) RIM = 101.27 N: 45291.80 E: 22175.20	8" INV: 94.80 (SW) 4" INV: 96.90 (SE)	8" INV: 94.78 (NE)

STRUCTURE TABLE			
STRUCTURE NAME:	DETAILS:	PIPES IN:	PIPES OUT
AD-139D	14"X14" AREA DRAIN RIM = 100.10 N: 45208.23 E: 22243.58		8" INV: 98.07 (E)
AD-140D	14"X14" AREA DRAIN RIM = 100.10 N: 45157.65 E: 22298.13		8" INV: 97.81 (N)
AD #132D	8" AD WITH 14X14 GRATE RIM = 99.90 N: 45004.13 E: 22278.47	8" INV: 96.52 (S)	
AD #147C	8" AD RIM = 103.76 N: 45394.89 E: 21935.46		8" INV: 99.20 (SE)
AD #148C	8" AD RIM = 104.01 N: 45387.56 E: 21956.63		8" INV: 99.30 (W)
AD #149C	8" AD RIM = 104.04 N: 45433.55 E: 21993.03		8" INV: 101.52 (SE)
AD #150C	8" AD RIM = 104.25 N: 45458.59 E: 22020.80	8" INV: 101.62 (NE)	10" INV: 101.62 (SW)
AD #151C	8" AD RIM = 104.46 N: 45483.40 E: 22048.36	8" INV: 101.81 (NE)	8" INV: 101.81 (SW)
AD #152C	8" AD RIM = 104.50 N: 45509.30 E: 22077.12		8" INV: 102.00 (SW)
AD #153C	8" AD RIM = 103.91 N: 45389.04 E: 21987.83		8" INV: 99.62 (SW)
AD #154C	8" AD RIM = 103.26 N: 45354.31 E: 22013.35		8" INV: 99.81 (SW)
AD #156C	8" AD RIM = 102.52 N: 45317.59 E: 22046.39		8" INV: 99.94 (SW)
AD #157C	8" AD RIM = 102.52 N: 45305.08 E: 22032.43		8" INV: 99.99 (NE)
AD #158C	8" AD RIM = 102.87 N: 45322.17 E: 22017.01		8" INV: 99.74 (NE)
AD #159C	8" AD RIM = 103.26 N: 45341.82 E: 21999.23		8" INV: 99.82 (NE)
AD #160C	8" AD RIM = 103.08 N: 45315.03 E: 21964.06		8" INV: 100.07 (NE)
AD #161C	8" AD RIM = 103.04 N: 45301.13 E: 21976.57		8" INV: 100.07 (NE)
AD #162C	8" AD RIM = 101.95 N: 45270.12 E: 21966.75		8" INV: 97.49 (SE)
AD #163C	8" AD RIM = 102.05 N: 45244.82 E: 21989.58	8" INV: 97.33 (SE)	8" INV: 97.33 (NW)
AD #164C	8" AD RIM = 101.63 N: 45212.42 E: 22004.22		8" INV: 97.76 (NE)
AD #166C	14"X14" AREA DRAIN RIM = 100.40 N: 45292.14 E: 22244.25		8" INV: 98.40 (SW)
AD #166C	14"X14" AREA DRAIN RIM = 101.55 N: 45201.17 E: 22046.78		8" INV: 98.88 (SW)

STRUCTURE TABLE			
STRUCTURE NAME:	DETAILS:	PIPES IN:	PIPES OUT
AD #167C	14"X14" AREA DRAIN RIM = 101.55 N: 45181.66 E: 22025.93		8" INV: 98.66 (E)
AD #168C	14"X14" AREA DRAIN RIM = 101.67 N: 45167.28 E: 22013.80		8" INV: 98.84 (E)
AD #169C	14"X14" AREA DRAIN RIM = 101.64 N: 45154.01 E: 22002.72		8" INV: 99.00 (NE)
CB #135D	FDOT INDEX 233 TYPE F RIM = 99.40 N: 45129.72 E: 22379.67	15" INV: 97.02 (NW)	18" INV: 97.02 (SW)
CB #136D	FDOT INDEX 233 TYPE F RIM = 99.90 N: 45181.66 E: 22319.05	12" INV: 97.39 (NW) 8" INV: 97.49 (SW)	15" INV: 97.39 (SE)
CB #137D	FDOT INDEX 233 TYPE F RIM = 99.90 N: 45230.28 E: 22262.64	12" INV: 97.76 (NW) 8" INV: 97.76 (SW)	12" INV: 97.76 (SE)
CB #138D	FDOT INDEX 233 TYPE F RIM = 100.80 N: 45264.10 E: 22223.99	8" INV: 98.10 (SW) 8" INV: 98.10 (W) 8" INV: 98.10 (NE)	12" INV: 98.10 (SE)
CB #155C	8" AD RIM = 102.87 N: 45334.51 E: 22031.06		8" INV: 99.80 (SW)
DHM #11D	6' DMH RIM = 97.70 N: 44950.31 E: 22222.64		
DMH #130D	4' DMH RIM = 99.15 N: 44940.70 E: 22224.05	18" INV: 95.79 (E) 12" INV: 95.75 (NW)	18" INV: 95.75 (SW)
EX. DMH 4C EXT.	4' DIA RISER SECTION W/MANHOLE COVER FDOT - TYPE J RIM = 100.70 N: 45136.84 E: 22008.84		
INLET-1 (CB #142C)	FDOT INDEX 232 TYPE C RIM = 97.80 N: 45092.06 E: 21987.76	15" INV: 94.99 (N)	18" INV: 94.99 (SE)
INLET-2 (DMH #143C)	4' DMH RIM = 100.40 N: 45168.67 E: 21980.91	15" INV: 95.48 (N) 12" INV: 95.90 (E) 18" INV: 95.40 (SE)	15" INV: 95.40 (S)
INLET-3 (CB #165C)	FDOT INDEX 232 TYPE C RIM = 98.80 N: 45186.12 E: 22024.44	10" INV: 96.10 (SE)	12" INV: 95.93 (W)
INLET-4 (CB #144C)	FDOT INDEX 232 TYPE C RIM = 100.90 N: 45233.18 E: 21962.45	15" INV: 95.92 (NW) 12" INV: 96.83 (NE)	15" INV: 95.82 (S)
INLET-5 (CB #145C)	FDOT INDEX 232 TYPE C RIM = 100.80 N: 45332.99 E: 21694.29	15" INV: 96.69 (NE)	15" INV: 96.69 (SE)
INLET-6 (DHM #146C)	4' DMH RIM = 104.10 N: 45363.35 E: 21925.53	12" INV: 97.19 (N)	15" INV: 97.09 (SW)
SMH-1 (DMH #141C)	4' DMH RIM = 97.70 N: 45045.45 E: 22015.88	18" INV: 94.47 (NW)	18" INV: 94.37 (SW)
SMH-2 (DMH #120D)	4' DMH RIM = 98.60 N: 44923.12 E: 22195.82		12" INV: 95.65 (SW) 12" INV: 95.65 (SW)
SMH-3 (DMH #119D)	4' DMH RIM = 97.75 N: 44883.17 E: 22164.23	12" INV: 95.40 (NE) 12" INV: 95.40 (NE)	18" INV: 93.90 (SW)

30' 0 15' 30' 60'
(IN FEET)
1 inch = 30' ft.

HEERY design
Heery International Inc.
100 East Pine Street, Suite 300
Orlando, Florida 32801
407.992.6300
EB: 0005178
AA: 0002292
PROJECT # HI-1500232

TO THE BEST OF MY KNOWLEDGE THESE DRAWINGS AND SPECIFICATIONS COMPLY WITH THE APPLICABLE BUILDING CODES.
SEAL

PRINTED NAME: KEVIN G. KLAUCH
REG. No. P.E. # 53560

NO.	DATE	DESCRIPTION OF REVISIONS
9		
8		
7		
6		
5		
4		
3		
2	11/06/17	SFWMD PERMIT MOD
1		ISSUED FOR

NOTICES:
THE DATA IN THIS DOCUMENT INCORPORATE PROPRIETARY RIGHTS OF WALT DISNEY PARKS AND RESORTS U.S., INC. COPYRIGHT © 2000. ANY PARTY ACCEPTING THIS DOCUMENT DOES SO IN CONFIDENCE, AND AGREES NOT TO REPRODUCE, IN WHOLE OR IN PART, OR TO DISCLOSE DISCLOSED TO OTHERS, WITHOUT THE WRITTEN CONSENT OF WALT DISNEY.
CONTRACTOR SHALL VERIFY ALL CONDITIONS ON JOB SITE & NOTIFY THE ENGINEER OF ANY DISCREPANCIES BETWEEN THE DRAWINGS AND ACTUAL CONDITIONS PRIOR TO ANY CONSTRUCTION.

KEY PERSONS AND APPROVALS

	INITIALS:	DATE:
DESIGN MANAGER: J. PARNIELLA	H. McGLOUGHLIN	
CIVIL ENGINEERING LEAD:	CHECKED: K. KLAUCH	
CIVIL ENGINEER:	APPROVED: K. KLAUCH	
APPROVAL SIGNATURE:	APPROVAL SIGNATURE:	
DATE: 11/06/17	E.F.No.: C-202-SFWMD.DWG	

Imagineering Division
Architecture and Engineering
1380 Reeder Rd., Bldg. 4
Lake Buena Vista, Florida 32830-0083
© Disney

PROJECT DESIGNED FOR
EPCOT
Walt Disney World

PROJECT AREA: WDI-EPCOT
UNIT NAME: PROJECT MI AREA DEVELOPMENT
900 ASCOT DRIVE, BAY LAKE, FL 32830
SHEET TITLE: OVERALL DRAINAGE PLAN

PHASE: BD16-000
PROJECT/CDMS CODE NO.: WFR09-04
DRAWING NO.: 189-04 C-202
REVISION NO.: AREA DEVELOPMENT

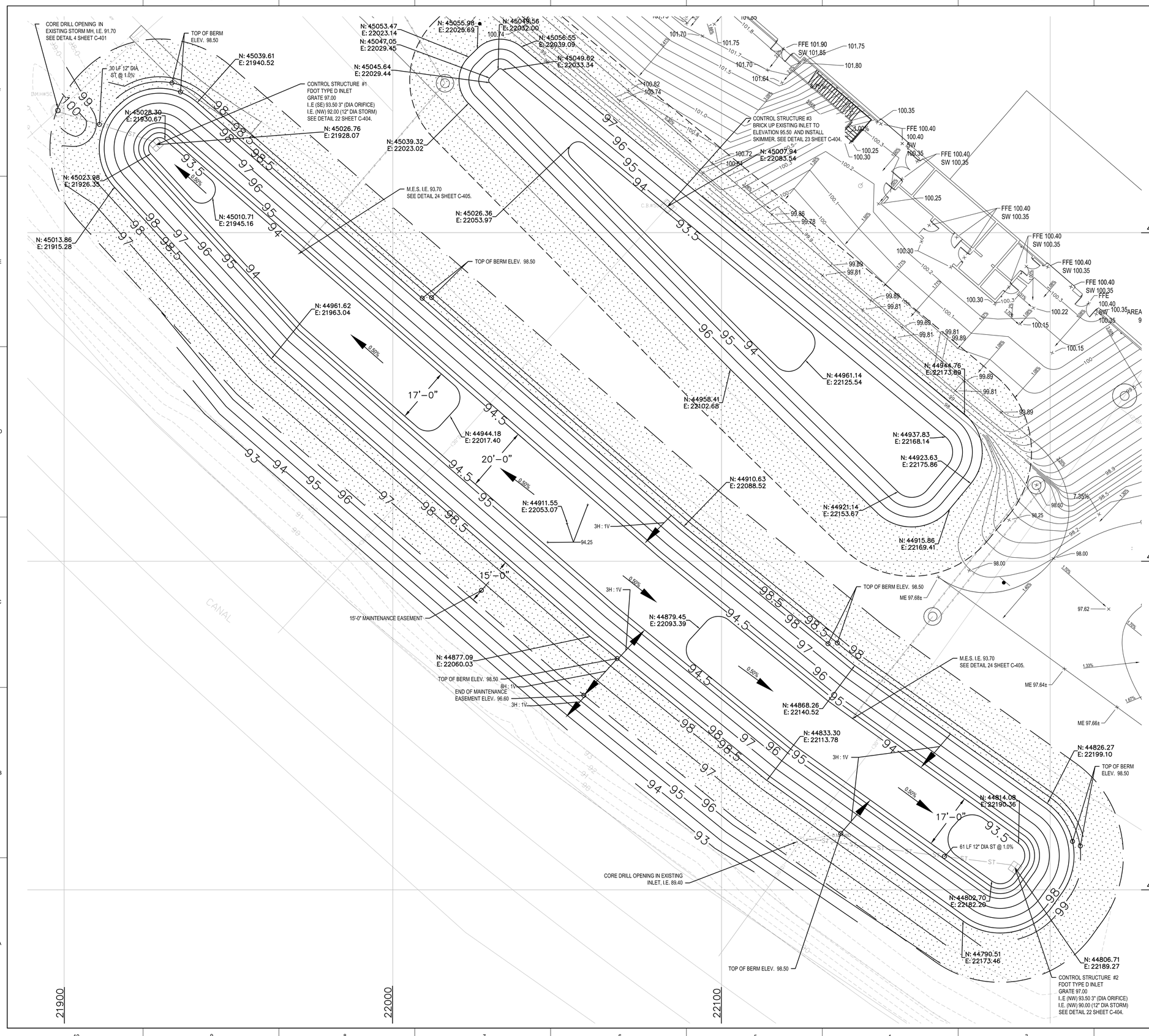

10' 0 5' 10' 20'
(IN FEET)
1 inch = 10' ft.

HEERY design
Heery International Inc. 100 East Pine Street, Suite 300, Orlando, Florida 32801 407 392 6300
E.B. 0000176
L.C. 26000547
PROJECT **HI-170550**

TO THE BEST OF MY KNOWLEDGE THESE DRAWINGS AND SPECIFICATIONS COMPLY WITH THE APPLICABLE BUILDING CODES.
SEAL

PRINTED NAME: KEVIN G. KLUEH
REG. No. P.E. # 53048

REV NO.	BY	DATE	DESCRIPTION OF REVISIONS
9			
8			
7			
6			
5			
4			
3			
2		11/06/17	SFWMD PERMIT MOD
1			ISSUED FOR

NOTICES:
THE DATA IN THIS DOCUMENT INCORPORATE PROPRIETARY RIGHTS OF WALT DISNEY PARKS AND RESORTS U.S., INC. (DISNEY) AND MAY NOT BE REPRODUCED, USED OR DISCLOSED TO OTHERS EXCEPT AS SPECIFICALLY AUTHORIZED IN WRITING BY DISNEY. THE RECEIPT OF THIS DOCUMENT CONSTITUTES AGREEMENT TO THE FOREGOING RESTRICTIONS.
CONTRACTORS SHALL VERIFY ALL DIMENSIONS BY JOB SITE BEFORE THE BEGINNING OF ANY CONSTRUCTION. REPORT ANY ERRORS, OMISSIONS OR CONFLICTS IMMEDIATELY BEFORE PROCEEDING WITH ANY CONSTRUCTION.

Walt Disney Parks and Resorts U.S., Inc.
P.O. Box 10,000 Lake Buena Vista Florida 32830-1000

KEY PERSONS AND APPROVALS

PROJECT MANAGER	J. PARINELLA	H McGLOUGHLIN
CIVIL ENGINEERING LEAD	A. A. NAO	K. KLUEH
APPROVAL SIGNATURE		
DATE	11/06/17	C-221-SFWMD.DWG

Walt Disney Imagineering Division
Architecture and Engineering
1380 Seven Seas Drive
Lake Buena Vista, Florida 32830-8051

PROJECT DESIGNED FOR
EPCOT
Walt Disney World

PROJECT AREA: WDI-EPCOT
UNIT NAME: PROJECT MI AREA DEVELOPMENT
800 ASCOT DRIVE, BAY LAKE, FL 32830
SHEET TITLE: POND ENLARGEMENTS AND DETAILS

PERMIT #	EDMS CODE
BD16-000	WFR09-04
1819-04	PACKAGE: AREA DEVELOPMENT
C-221	DRAWING NO. / REV#

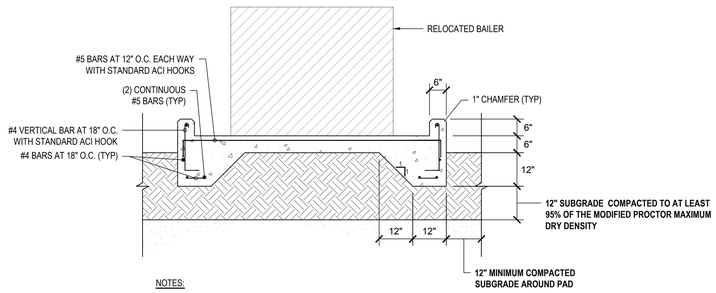

NOTES:

1. COORDINATE SIZE AND LOCATION OF BAILER PAD WITH SHEETS C-111 AND C-113.
2. ANCHORAGE OF BAILER TO PAD TO BE REPLACED IN KIND FROM ORIGINAL LOCATION.
3. CONCRETE TO BE A MINIMUM OF 4000 PSI.

TEMPORARY BAILER PAD DETAIL (1 / C-401)

SCALE: N.T.S.

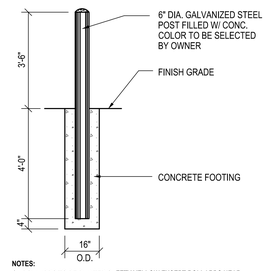

NOTES:

1. BOLLARDS TO BE PAINTED SAFETY YELLOW EXCEPT BOLLARDS NEAR FIRE HYDRANTS TO BE PAINTED RED.

BOLLARDS (2 / C-401)

SCALE: N.T.S.

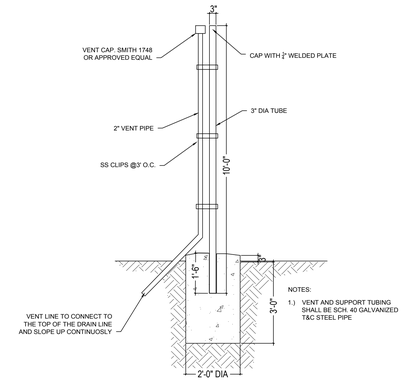

NOTES:

1.) VENT AND SUPPORT TUBING SHALL BE SCH. 40 GALVANIZED T&C STEEL PIPE

SANITARY SEWER VENT DETAIL (3 / C-401)

SCALE: N.T.S.

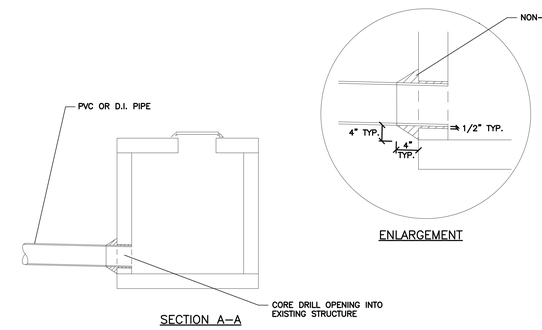

CORE DRILL PIPE CONNECTION TO STRUCTURE (4 / C-401)

SCALE: N.T.S.

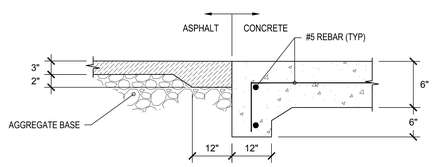

ASPHALT TO CONCRETE PAVING TRANSITION (5 / C-401)

SCALE: N.T.S.

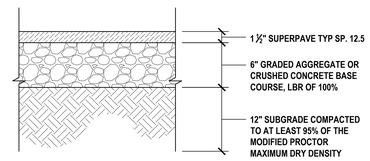

ASPHALT PAVING (6 / C-401)

SCALE: N.T.S.

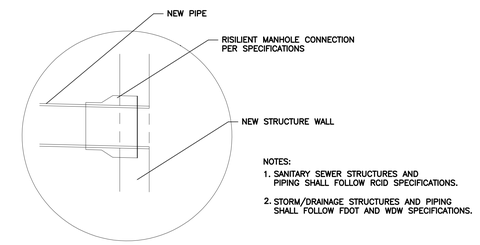

NOTES:

1. SANITARY SEWER STRUCTURES AND PIPING SHALL FOLLOW RCID SPECIFICATIONS.
2. STORM/DRAINAGE STRUCTURES AND PIPING SHALL FOLLOW FDOT AND WDW SPECIFICATIONS.

PIPE CONNECTION TO NEW STRUCTURE (7 / C-401)

SCALE: N.T.S.

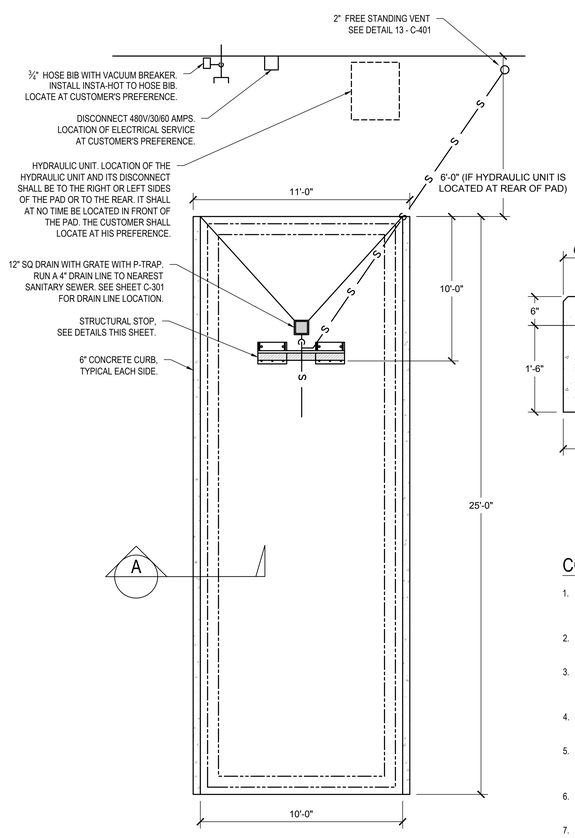

TEMPORARY COMPACTOR PAD – PLAN VIEW (8 / C-401)

NOTE: CLEARANCE HEIGHT REQUIREMENTS: 21'–0" SCALE: N.T.S.

FOR REFERENCE ONLY

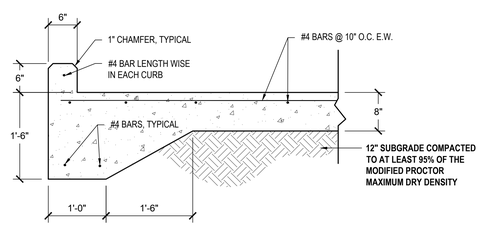

A SECTION

SCALE: N.T.S.

FOR REFERENCE ONLY

COMPACTOR PAD GENERAL NOTES:

1. THIS DETAIL WILL BE GENERALL SUITABLE FOR ALL NEW CONSTRUCTION PACKER PADS OR REHAB OF EXISTING PADS THAT WILL EMPLOY A 20 TO 40 CUBIC YARD COMPACTOR OR OPEN BOX.
2. STRUCTURAL STEEL SHAPES, PLATES, AND TUBES SHALL CONFORM TO ASTM-A36 FOR 36SKI YIELD STRENGTH STEEL.
3. ALL WELDING SHALL CONFORM TO AWSS.1 USING THE MANUAL SHIELDED METAL METHOD FOR A36 STEEL. ELECTRODES USED SHALL BE LOW HYDROGEN, E 70XX SERIES.
4. FLAME CUTTING IS PERMITTED. ALL FLAME CUT SURFACES SHALL BE GROUND SMOOTH AND TRUE.
5. HOLES MAY BE DRILLED, PUNCHED, OR FLAME CUT. ALL HOLES SHALL BE PRECISELY LOCATED AND NOT MORE THAN ¼" LARGER IN DIAMETER THAN THE BOLT OR STUD PASSING THRU THE HOLE.
6. STEEL SHALL BE CLEANED OF ALL MILL SCALE, OIL, AND RUST PRIOR TO COATING BY USING A TYPE II COMMERCIAL SAND BLAST.
7. STEEL SHALL BE COATED WITH A PROTECTIVE COATING OF COALTAR EPOXY SIMILAR TO RUSTOLEUM 93-7903. TWO 8 MIL COATS SHALL BE APPLIED. FINAL COATING SHALL BE APPLIED PRIOR TO FIELD INSTALLATION.
8. CONCRETE SHALL BE A MINIMUM OF 4000 PSI

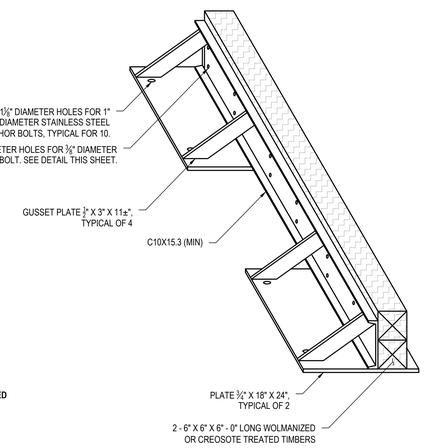

STRUCTURAL STOP – ISOMETRIC VIEW (9 / C-401)

FOR REFERENCE ONLY SCALE: N.T.S.

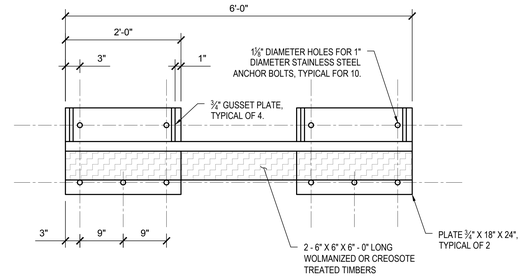

STRUCTURAL STOP – PLAN VIEW (10 / C-401)

FOR REFERENCE ONLY SCALE: N.T.S.

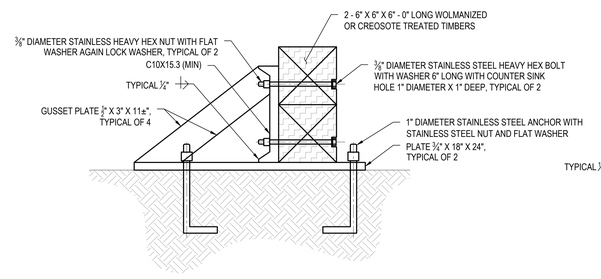

STRUCTURAL STOP – SIDE VIEW (11 / C-401)

FOR REFERENCE ONLY SCALE: N.T.S.

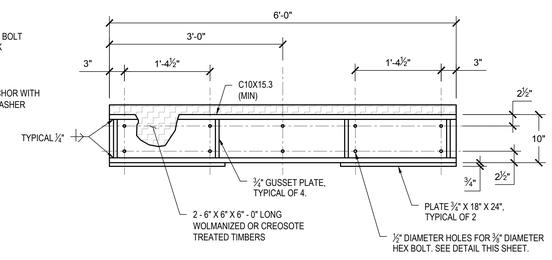

STRUCTURAL STOP – REAR VIEW (12 / C-401)

FOR REFERENCE ONLY SCALE: N.T.S.

HEERY design

Heery International Inc.
100 East Pine Street, Suite 300
Orlando, Florida 32801
407.992.8300
EB: 0005176
AA: 00022203
PROJECT # 08-170300

TO THE BEST OF MY KNOWLEDGE THESE DRAWINGS AND SPECIFICATIONS COMPLY WITH THE APPLICABLE BUILDING CODES.

SEAL

PRINTED NAME: KEVIN G. KLUCH
REG. No. P.E. # 53566

REV NO.	REV BY	DATE	DESCRIPTION OF REVISIONS
1			
2			
3			
4			
5			
6			
7			
8			
9			

ISSUED FOR: SFWMD PERMIT MOD 11/06/17

NOTICES:

THE DATA IN THIS DOCUMENT INCORPORATE PROPRIETARY RIGHTS OF WALT DISNEY PARKS AND RESORTS U.S., INC. (WDPRS) AND THE WALT DISNEY COMPANY (WDC). REPRODUCTION OR DISCLOSURE TO THIRD PARTIES WITHOUT EXPRESS WRITTEN PERMISSION IS PROHIBITED.

CONTRACTOR SHALL VERIFY ALL DIMENSIONS AND SITE CONDITIONS BEFORE PROCEEDING WITH CONSTRUCTION.

CONTRACTOR SHALL REPAIR ALL DAMAGES BY HIS OR HER PERSONNEL OR ANY SUBCONTRACTOR OR SUBCONTRACTOR'S PERSONNEL TO THE SATISFACTION OF WDW PRIOR TO FINAL ACCEPTANCE OF THE CONSTRUCTION.

Walt Disney Parks and Resorts U.S., Inc.
P.O.Box 10,000 Lake Buena Vista Florida 32830-1000

KEY PERSONS AND APPROVALS

	INITIALS	
DESIGN MANAGER	H MAGLOUGHLIN	
CIVIL ENGINEERING LEAD	J. PARINELLA	CHECKED
CIVIL ENGINEER	A. DUO	K KLUCH
PROJECT MANAGER		(PE REGISTERED)
		APPROVAL SIGNATURE
DATE	11/06/17	F.E.No. C-01-SFWMD.DWG

Walt Disney Imaginering Division
Architecture and Engineering
1380 Avenue of the Stars
Lake Buena Vista, Florida 32830-0321

PROJECT DESIGNED FOR

EPCOT Walt Disney World

PROJECT AREA: WDI-EPCOT

UNIT NAME: PROJECT MI AREA DEVELOPMENT

800 ACCOTT DRIVE, BAY LAKE, FL 32830

SHEET TITLE: DETAILS

PERMIT #: BD16-000

EDMS CODE: WFR09-04

PACKAGE: 1819-04 AREA DEVELOPMENT

DRAWING NO.: C-401

REV #:

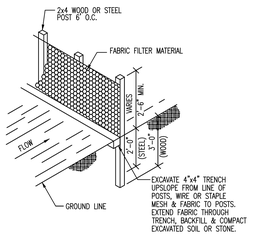

FABRIC SILT FENCE 6 C-402
SCALE: N.T.S.

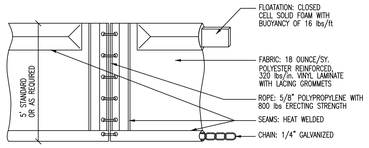

TURBIDITY CURTAIN 7 C-402
SCALE: N.T.S.

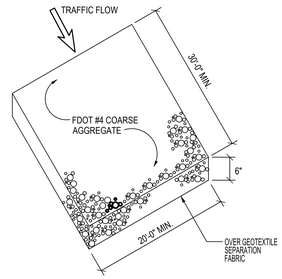

GRAVEL CONSTRUCTION VEHICLE ACCESS DRIVE 8 C-402
SCALE: N.T.S.

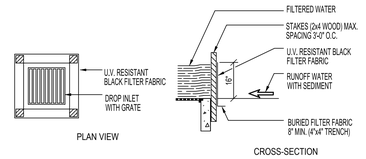

SILT FENCE DROP INLET SEDIMENT FILTER 9 C-402
SCALE: N.T.S.

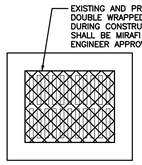

INLET PROTECTION 10 C-402
SCALE: N.T.S.

HEERY design
Heery International Inc.
1600 N. Park Ave Street, Suite 300
Orlando, Florida 32801
407.992.8300
EB: 0008176
AA: 0000208
PROJECT # HI-170200

TO THE BEST OF MY KNOWLEDGE THESE DRAWINGS AND SPECIFICATIONS COMPLY WITH THE APPLICABLE BUILDING CODES.
SEAL

PRINTED NAME: KEVIN G. ELUCH
REG. No. P.E. # 53566

NO.	DATE	DESCRIPTION OF REVISIONS
1	11/06/17	SFWMD PERMIT MOD

ISSUED FOR

NOTICES:
THE DATA IN THIS DOCUMENT INCORPORATE PROPRIETARY RIGHTS OF WALT DISNEY PARKS AND RESORTS U.S., INC. IT IS THE RECEIVER'S RESPONSIBILITY TO ENSURE THAT THIS DOCUMENT IS EDUCATED IN ACCORDANCE WITH NON-DISCLOSURE AGREEMENTS AND OTHER LEGAL RESTRICTIONS.
INITIALS
CONTRACTOR SHALL VERIFY ALL CONDITIONS FIELD AND SHALL NOTIFY THE OWNER OF ANY DISCREPANCIES AND DAMAGES BEFORE PROCEEDING WITH ANY CONSTRUCTION.

Walt Disney Parks and Resorts U.S., Inc.
P.O. Box 10,000 Lake Buena Vista, Florida 32830-1000

KEY PERSONS AND APPROVALS
DESIGN MANAGER: J. PARINIELLA
CIVIL ENGINEERING LEAD: H.NGLOUGHLIN
ARCHITECT: A. DAVIS
APPROVAL SIGNATURE:
CHECKED: K.ELUCH
PROJECT ARCHITECT:
APPROVAL SIGNATURE:
DATE: 11/06/17
E.F.S. No: C-405-SFWMD.DWG

Walt Disney Imaginering Design Division
Architecture and Engineering
1380 Buena Vista Drive
Lake Buena Vista, Florida 32830-0321

PROJECT DESIGNED FOR
EPCOT
Walt Disney World

PROJECT AREA: WDI-EPCOT
UNIT NAME: PROJECT MI AREA DEVELOPMENT
800 ACCOTT DRIVE, BAY LAKE, FL 32830
SHEET TITLE: DETAILS

PERMIT #: BD16-000
EDMS CODE: WFR09-04
1819-04
PACKAGE: AREA DEVELOPMENT
DRAWING NO.: C-402
REV#:

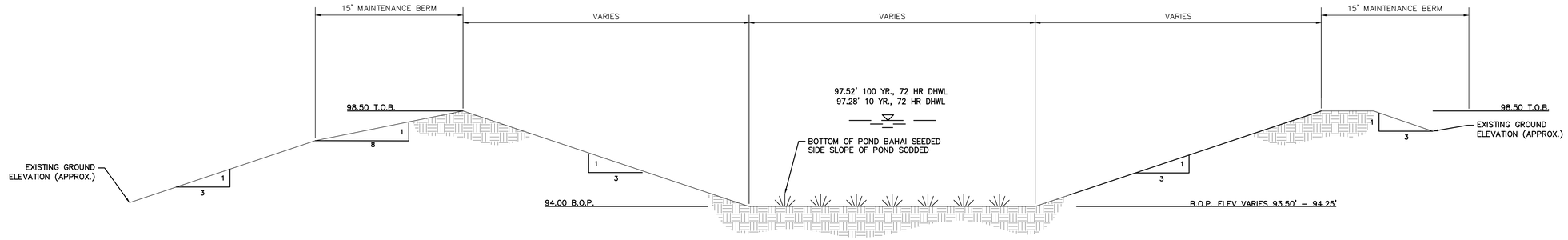

DRY DETENTION POND 1 SECTION

SCALE: N.T.S. 20 C-221 C-404

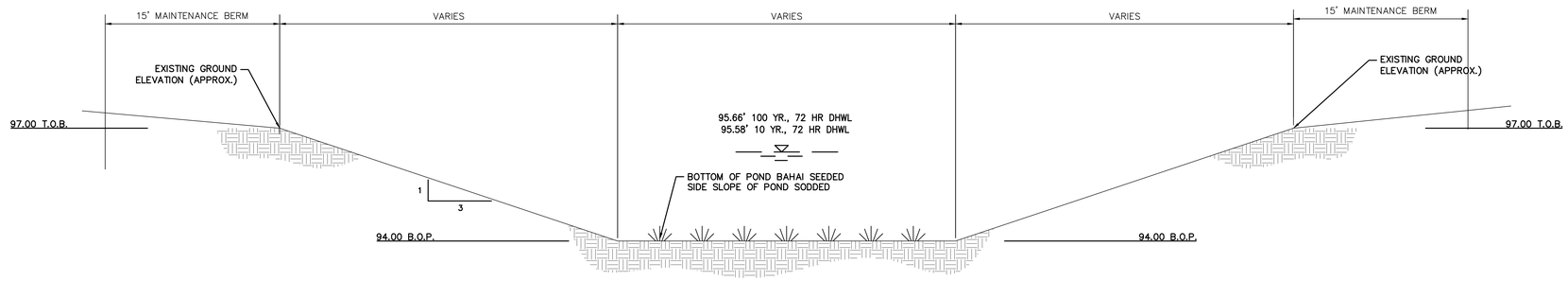

DRY DETENTION POND 2 SECTION

SCALE: N.T.S. 21 C-221 C-404

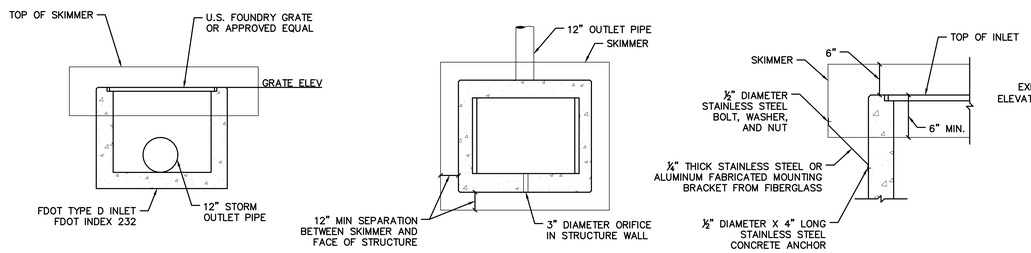

FRONT SECTION PLAN MOUNTING BRACKETS

NOTES:
1. SKIMMER TO BE ⅛" FIBERGLASS OR ALUMINUM ANCHORED TO STRUCTURE WITH ½" DIAMETER S.S. BOLTS.

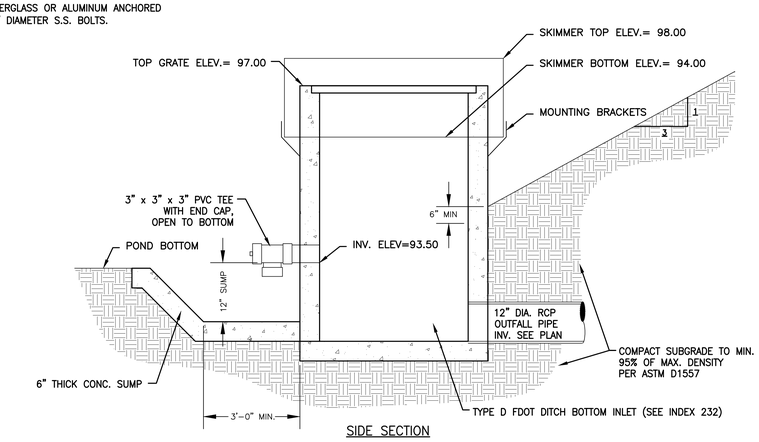

SIDE SECTION

CONTROL STRUCTURES #1 AND #2

SCALE: N.T.S. 22 C-221 C-404

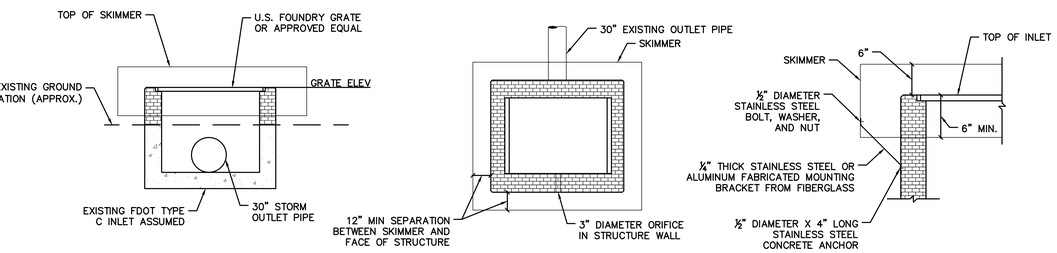

FRONT SECTION PLAN MOUNTING BRACKETS

NOTES:
1. SKIMMER TO BE ⅛" FIBERGLASS OR ALUMINUM ANCHORED TO STRUCTURE WITH ½" DIAMETER S.S. BOLTS.

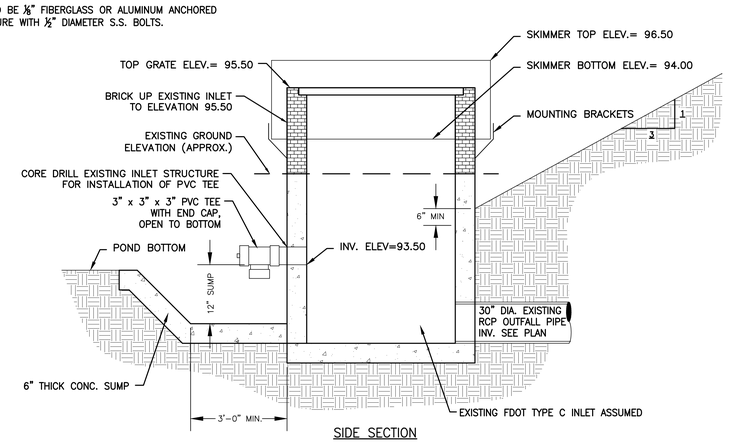

SIDE SECTION

CONTROL STRUCTURE #3

SCALE: N.T.S. 23 C-221 C-404

HEERY design
Heery International Inc. 1506 East Pine Street, Suite 200 Orlando, Florida 32801 407.992.8300
EB: 0005176
AA: 0002258
PROJECT # **05-170200**

TO THE BEST OF MY KNOWLEDGE THESE DRAWINGS AND SPECIFICATIONS COMPLY WITH THE APPLICABLE BUILDING CODES.

SEAL

PRINTED NAME: KEVIN G. KLUCH
REG. No. P.E. # 53568

NO.	BY	DATE	DESCRIPTION OF REVISIONS
1			
2			
3			
4			
5			
6			
7			
8			
9			

ISSUED FOR: SFWMD PERMIT MOD 11/06/17

NOTICES:
THIS DATA IS THE DOCUMENT INCORPORATE PROPRIETARY RIGHTS OF WALT DISNEY PARKS AND RESORTS U.S., INC. (WDPRS) AND MAY NOT BE REPRODUCED, DISTRIBUTED, OR DISCLOSED TO ANY OTHER PERSONS OR ENTITIES WITHOUT THE PRIOR WRITTEN AUTHORITY OF WDPRS. NON-CONFORMING DATA IS PROVIDED SOLELY FOR INFORMATIONAL PURPOSES. CONTRACTOR SHALL VERIFY ALL DIMENSIONS BEFORE CONSTRUCTION.

Walt Disney Parks and Resorts U.S., Inc.
P.O. Box 10,000 Lake Buena Vista, Florida 32830-1000

KEY PERSONS AND APPROVALS

DESIGN ENGINEER	J. PARINELLA	
CIVIL ENGINEERING LEAD	H.NGLOUGHLIN	INITIALS
A.D.C.	CHECKED	
APPROVING	K.KLUCH	
APPROVAL SIGNATURE	APPROVAL SIGNATURE	
DATE 11/06/17	F.E.No. C-045/FMD/DVG	

Walt Disney Imagineering Division
1380 Seaport of the Oceans
Lake Buena Vista, Florida 32830-0321
Architecture and Engineering

PROJECT DESIGNED FOR: EPCOT Walt Disney World

PROJECT AREA: WDI-EPCOT
UNIT NAME: PROJECT MI AREA DEVELOPMENT
600 ACCOTT DRIVE, BAY LAKE, FL 32830
SHEET TITLE: DETAILS

PERMIT # BD16-000
EDMS CODE: WFR09-04
PACKAGE: 1819-04 AREA DEVELOPMENT
DRAWING NO.: C-404
REV#

DIMENSIONS AND QUANTITIES

	D	X	A	B	C	E	F	G	H ***	M Single Pipe	M Double Pipe	M Triple Pipe	M Quad. Pipe	N	5½" CONCRETE SLAB (CY) ** Single Pipe	Double Pipe	Triple Pipe	Quad. Pipe	SODDING (SY) Single Pipe	Double Pipe	Triple Pipe	Quad. Pipe
1: 2 Slope	15"	2'–7"	1.92'	2.18'	4.10'	2.06'	5'	1.22'	2.9'	4.63'	7.21'	9.79'	12.37'	1.19'	0.38	0.58	0.77	0.96	21	24	27	30
	18"	2'–10"	1.97'	2.74'	4.71'	2.56'	6'	1.41'	3.4'	4.92'	7.75'	10.58'	13.42'	1.21'	0.44	0.65	0.87	1.09	22	25	28	31
	24"	3'–5"	2.06'	3.85'	5.91'	3.56'	7'	1.73'	3.4'	5.50'	8.92'	12.33'	15.75'	1.25'	0.54	0.83	1.12	1.42	24	28	32	35
	30"	4'–3"	2.15'	4.95'	7.10'	4.56'	8'	2.00'	3.4'	6.08'	10.33'	14.58'	18.83'	1.29'	0.66	1.09	1.50	1.91	26	31	35	40
	36"	5'–1"	2.25'	6.08'	8.33'	5.56'	9'	2.24'	3.4'	6.67'	11.75'	16.83'	21.92'	1.33'	0.81	1.38	1.95	2.51	28	34	39	45
	42"	6'–0"	2.34'	7.21'	9.55'	6.56'	10'	2.45'	3.4'	7.25'	13.25'	19.25'	25.25'	1.38'	0.97	1.70	2.45	3.19	30	37	43	50
	48"	6'–9"	2.43'	8.33'	10.76'	7.56'	11'	2.65'	3.4'	7.83'	14.58'	21.33'	28.08'	1.42'	1.13	2.04	2.93	3.84	32	39	47	54
	54"	7'–8"	2.52'	9.44'	11.96'	8.56'	12'	2.83'	3.4'	8.42'	16.08'	23.75'	31.42'	1.46'	1.31	2.44	3.58	4.72	34	42	51	59
	60"	8'–6"	2.62'	10.56'	13.18'	9.56'	14'	3.00'	4.4'	9.00'	17.50'	26.00'	34.50'	1.50'	1.51	2.89	4.28	5.68	36	45	55	64
	66"	9'–2"	2.71'	11.68'	14.39'	10.56'	15'	3.18'	4.4'	9.58'	18.75'	27.92'	37.08'	1.54'	1.68	3.25	4.84	6.43	38	48	58	68
	72"	10'–0"	2.80'	12.80'	15.60'	11.56'	16'	3.30'	4.4'	10.16'	20.16'	30.16'	40.16'	1.58'	1.89	3.74	5.59	7.45	40	51	62	73
1: 4 Slope	15"	2'–7"	2.27'	4.09'	6.36'	4.03'	8'	1.22'	4.0'	4.63'	7.21'	9.79'	12.37'	1.19'	0.57	0.87	1.15	1.44	23	26	29	32
	18"	2'–10"	2.36'	5.12'	7.48'	5.03'	9'	1.41'	4.0'	4.92'	7.75'	10.58'	13.42'	1.21'	0.66	0.99	1.31	1.65	25	28	31	35
	24"	3'–5"	2.53'	7.18' ?	9.71'	7.03' ?	11'	1.73'	4.0'	5.50'	8.92'	12.33'	15.75'	1.25'	0.85	1.30	1.75	2.20	28	32	36	40
	30"	4'–3"	2.70'	9.25'	11.95'	9.03'	13'	2.00'	4.0'	6.08'	10.33'	14.58'	18.83'	1.29'	1.10	1.74	2.39	3.05	31	36	41	46
	36"	5'–1"	2.87'	11.31' ?	14.18'	11.03' ?	15'	2.24'	4.0'	6.67'	11.75'	16.83'	21.92'	1.33'	1.32	2.21	3.08	3.96	34	40	46	52
	42"	6'–0"	3.05'	13.37'	16.42'	13.03'	17'	2.45'	4.0'	7.25'	13.25'	19.25'	25.25'	1.38'	1.58	2.76	3.91	5.09	38	44	51	58
	48"	6'–9"	3.22'	15.43'	18.65'	15.03'	19'	2.65'	4.0'	7.83'	14.58'	21.33'	28.08'	1.42'	1.85	3.30	4.73	6.17	41	48	56	63
	54"	7'–8"	3.39'	17.49'	20.88'	17.03'	21'	2.83'	4.0'	8.42'	16.08'	23.75'	31.42'	1.46'	2.14	3.95	5.77	7.58	44	52	61	69
	60"	8'–6"	3.56'	19.55'	23.11'	19.03'	23'	3.00'	4.0'	9.00'	17.50'	26.00'	34.50'	1.50'	2.45	4.66	6.87	9.07	47	56	66	75
	66"	9'–2"	3.73'	21.62'	25.35'	21.03'	25'	3.18'	4.0'	9.58'	18.75'	27.92'	37.08'	1.54'	2.88	5.54	8.18	10.84	49	59	69	80
	72"	10'–0"	3.91'	23.68'	27.59'	23.03'	27'	3.30'	4.0'	10.16'	20.16'	30.16'	40.16'	1.58'	3.54	6.61	9.87	13.13	52	63	74	85

** See General Note No. 5.
See Sheet 5 For 3" Slab Quantities

*** Values shown for estimating pipe quantities and are for information only.

B	E	
6.42'	6.25'	Dimensions permitted to allow use of 8' standard pipe lengths.
10.40'	10.10'	Dimensions permitted to allow use of 12' standard pipe lengths.

Concrete slab shall be deepened to form bridge across crown of pipe. See section below.

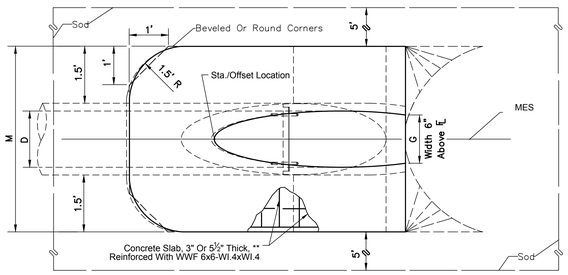

TOP VIEW

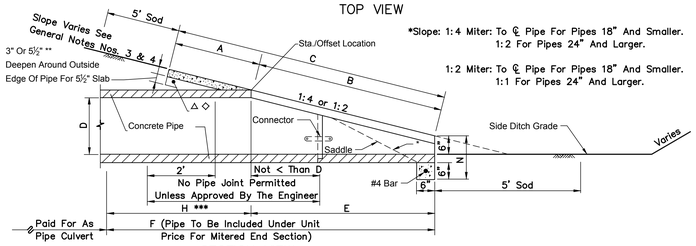

*Slope: 1:4 Miter: To ℄ Pipe For Pipes 18" And Smaller.
1:2 For Pipes 24" And Larger.

1:2 Miter: To ℄ Pipe For Pipes 18" And Smaller.
1:1 For Pipes 24" And Larger.

SECTION VIEW

FDOT INDEX 272
CROSS DRAIN MITERED END SECTION

SCALE: N.T.S. 24 C-221 C-405

SPECIFICATION:
JOSAM 37900 SERIES COATED CAST IRON LEVELEZE ® FLOOR DRAIN WITH SQUARE GRATE SET IN SQUARE FRAME, GRATE SUPPORT COLLAR WITH DOUBLE DRAINAGE FLANGE AND WEEPHOLES, BOTTOM OUTLET, ADJUSTABLE COLLAR, SUPPORT RING, LARGE SUMP BODY, REMOVABLE SEDIMENT BUCKET AND HEAVY-DUTY DUCTILE IRON GRATE.

FLOOR DRAIN
14" PACKING HOUSE TYPE
SERIES **37900**

SLOT WIDTH 5/16" (-19 & -20 SLOT WIDTH 1/4") — FORMERLY 31800 SERIES

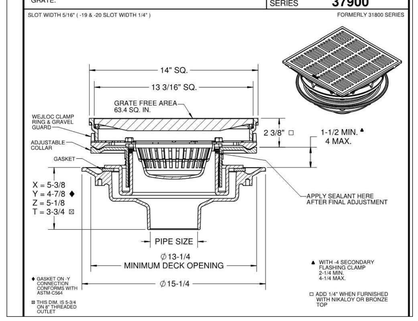

AREA DEVELOPMENT DRAIN

SCALE: N.T.S. 2 C-201 C-405

NO.	BY	DATE	DESCRIPTION OF REVISIONS
1			
2			
3			
4			
5			
6			
7			
8			
9			

ISSUED FOR: SFWMD PERMIT MOD — DATE: 11/06/17

NOTICES:
THE DATA IN THIS DOCUMENT INCORPORATE PROPRIETARY RIGHTS OF WALT DISNEY PARKS AND RESORTS U.S., INC. AND MAY NOT BE REPRODUCED, USED OR DISCLOSED TO OTHERS EXCEPT AS SPECIFICALLY AUTHORIZED IN WRITING BY WALT DISNEY PARKS AND RESORTS U.S., INC. THE RIGHTS OF THE OWNER IN PATENTS, COPYRIGHTS, TRADE SECRETS OR OTHER INTELLECTUAL PROPERTY RIGHTS ARE NOT LIMITED BY THE CONTENTS OF THIS DOCUMENT.
CONTRACTOR SHALL VERIFY ALL DIMENSIONS PRIOR TO CONSTRUCTION. CONTRACTOR SHALL REPORT ALL DISCREPANCIES AND BE RESPONSIBLE FOR ANY AND ALL CORRECTIVE WORK AND MATERIALS BUILDING ON THESE DRAWINGS BEFORE PROCEEDING WITH ANY CONSTRUCTION.

Walt Disney Parks and Resorts U.S., Inc.
P.O. Box 10,000 Lake Buena Vista, Florida 32830-1000

KEY PERSONS AND APPROVALS

DESIGNED BY: J. PARINELLA	DRAWN: M.GLOUGHLIN	CHECKED: A. KUCER	
CONT. ENGINEERING LEAD: A. DIAZ			
ENGINEER OF RECORD:			
DATE: 11/06/17	F.E.No.: C-425-SFWMD.DWG	APPROVAL SIGNATURE:	

Walt Disney Imaginering Design Division
Architecture and Engineering
1380 Avenue of the Pines
Lake Buena Vista, Florida 32830-8021

PROJECT DESIGNED FOR: EPCOT — Walt Disney World

HEERY design
Heery International Inc.
100 East Pine Street, Suite 500
Orlando, Florida 32801
407 992 8300
EB: 0005176
AA: 0002226
PROJECT # 98-170200

TO THE BEST OF MY KNOWLEDGE THESE DRAWINGS AND SPECIFICATIONS COMPLY WITH THE APPLICABLE BUILDING CODES.
SEAL

PRINTED NAME: KEVIN G. KLAUCH
REG. No. P.E. # 53566

PROJECT AREA: WDI-EPCOT
UNIT NAME: PROJECT MI AREA DEVELOPMENT
809 AUDIT DRIVE, BAY LAKE, FL 32830
SHEET TITLE: DETAILS

PERMIT #: BD16-000 — EDMS CODE: WFR09-04
PACKAGE: 1819-04 — AREA DEVELOPMENT
DRAWING NO.: C-405 — REV#: