YOUNGQUIST BROTHERS, Inc

GEOPHYSICAL LOGGING DIVISION

FLOWMETER LOG

Company PALM BEACH COUNTY
Well DZMW #1
Field LAKE REGION
County PALM BEACH
State FLORIDA

Company PALM BEACH COUNTY WATER UTIL.
Well DZMW #1
Field LAKE REGION
County PALM BEACH State FLORIDA

Location

Other Services
SEE
COMMENTS

Permanent Datum	PAD	Elevation	
Log Measured From	PAD		
Drilling Measured From	PAD		

Elevation
K.B.
D.F.
G.L.

Date	9-JUNE-2006		
Run Number	FOUR		
Depth Driller	1940'		
Depth Logger	1940'		
Bottom Logged Interval	1940'		
Top Log Interval	CASING		
Open Hole Size	12.25"		
Type Fluid	WATER		
Density / Viscosity	NA		
Max. Recorded Temp.	NA		
Estimated Cement Top	NA		
Time Well Ready	1430		
Time Logger on Bottom	1430		
Equipment Number	103		
Location	FT.MYERS		
Recorded By	CATHEY		
Witnessed By	R. SIMON		

Borehole Record				Borehole Record			
Run Number	Bit	From	To	Run No.	Bit	From	To
ONE	38.5"	SURFACE	199'				
TWO	12.25"	CASING	900'				
THREE	28.5"	CASING	861'				
FOUR	12.25"	CASING	1940'				

Casing Record	Size	Wgt/Ft	Top	Bottom
Surface String	30"	.375" W.T.	SURFACE	192'
Prot. String	20"	.375" W.T.	SURFACE	850'
Production String				
Liner				

<<< Fold Here >>>

All interpretations are opinions based on inferences from electrical or other measurements and we cannot and do not guarantee the accuracy or correctness of any interpretation, and we shall not, except in the case of gross or willful negligence on our part, be liable or responsible for any loss, costs, damages, or expenses incurred or sustained by anyone resulting from any interpretation made by any of our officers, agents or employees. These interpretations are also subject to our general terms and conditions set out in our current Price Schedule.

Comments

OTHER SERVICES:

X-Y CALIPER / GAMMA RAY
SONIC
BOREHOLE TELEVIEWER
FLUID CONDUCTIVITY / TEMP
DUAL INDUCTION

DYNAMIC FLOWRATE = 115 GPM

YOUNGQUIST BROTHERS, Inc
GEOPHYSICAL LOGGING DIVISION

MERGED FLOWMETER

Database File: bellemw1.db
Dataset Pathname: run4/pass10
Presentation Format: FM_DNMG
Dataset Creation: Fri Jun 09 23:07:34 2006 by Log 6.2_B4
Charted by: Depth in Feet scaled 1:240

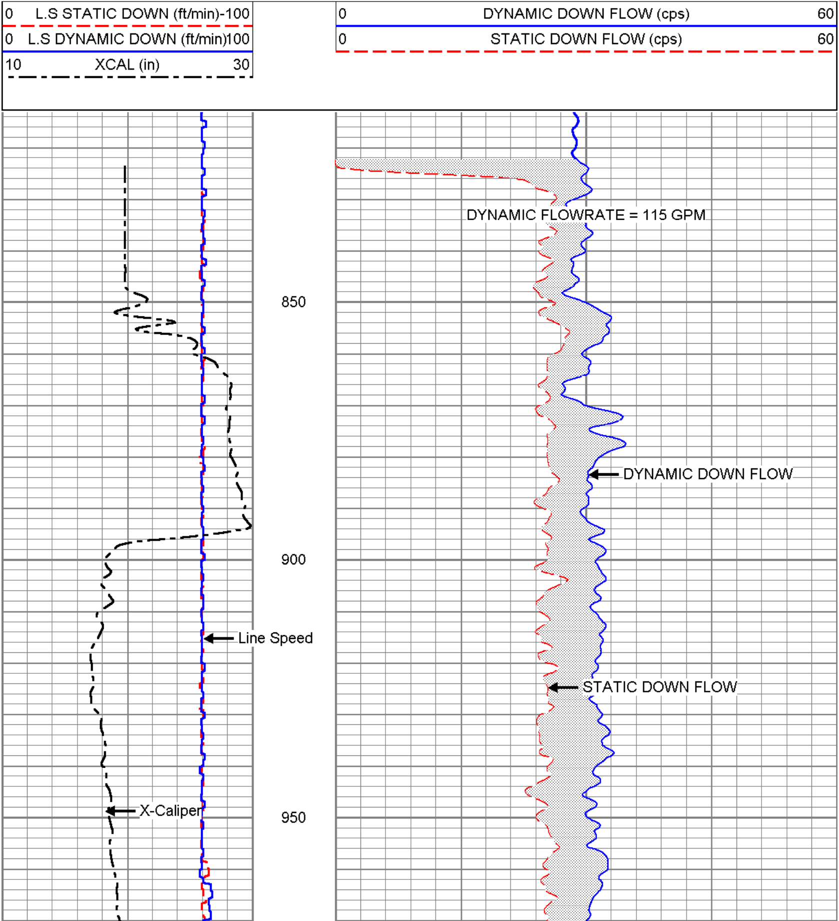

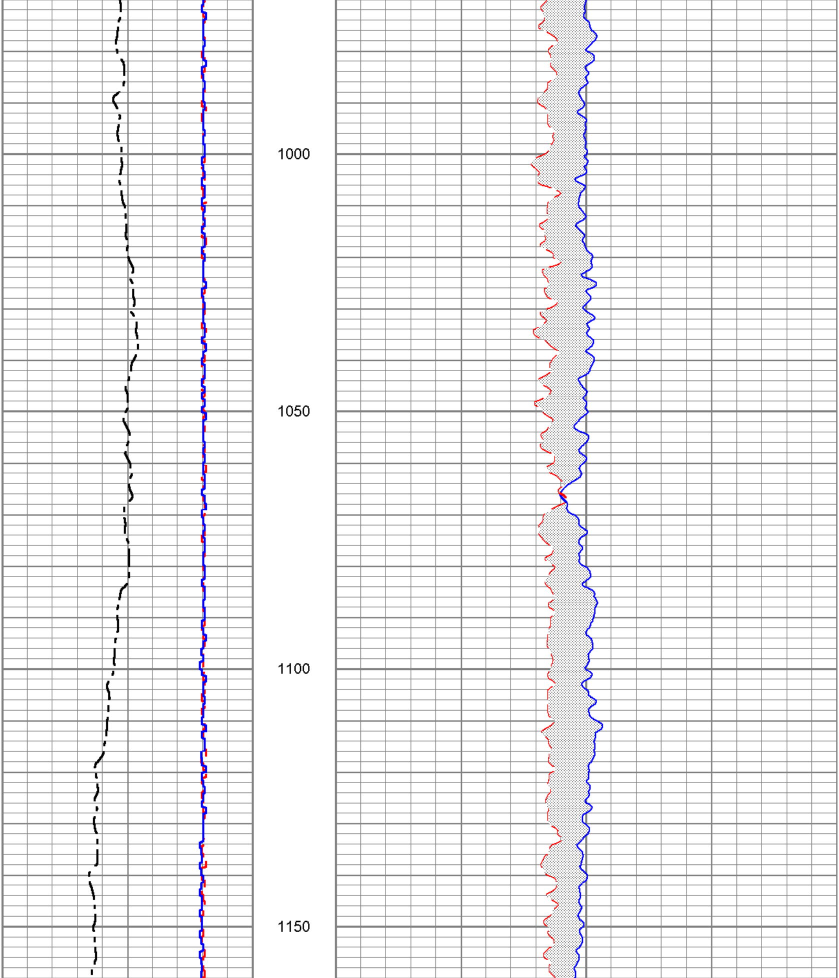

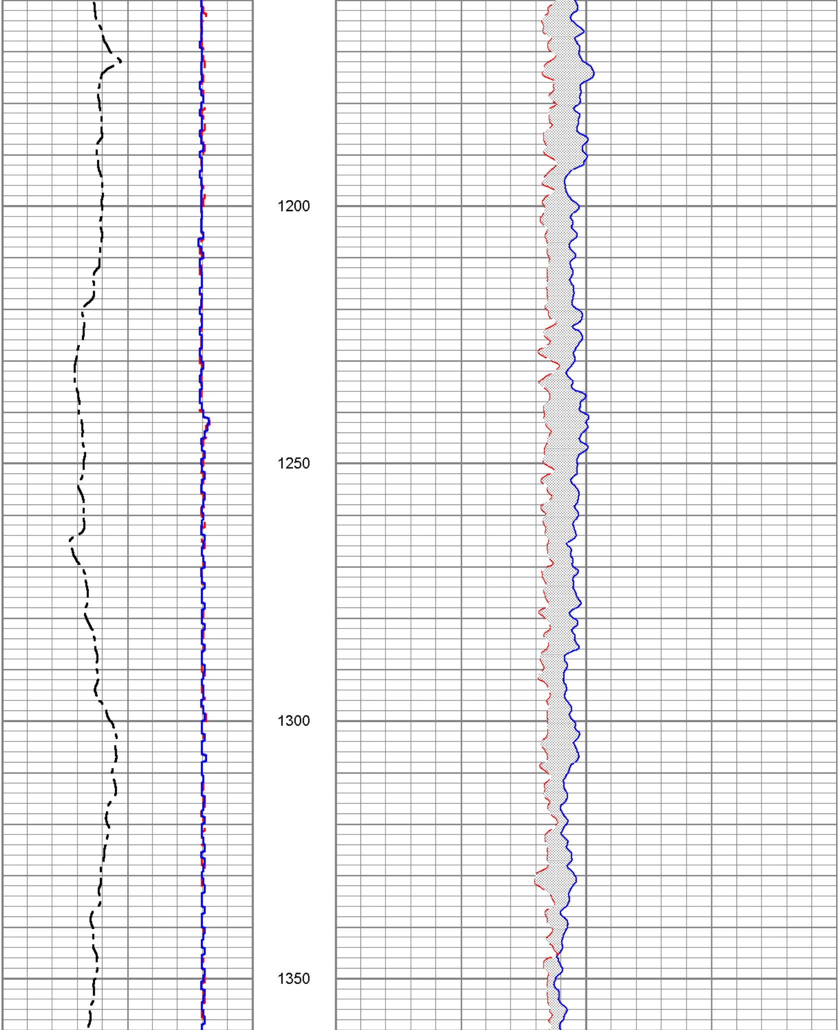

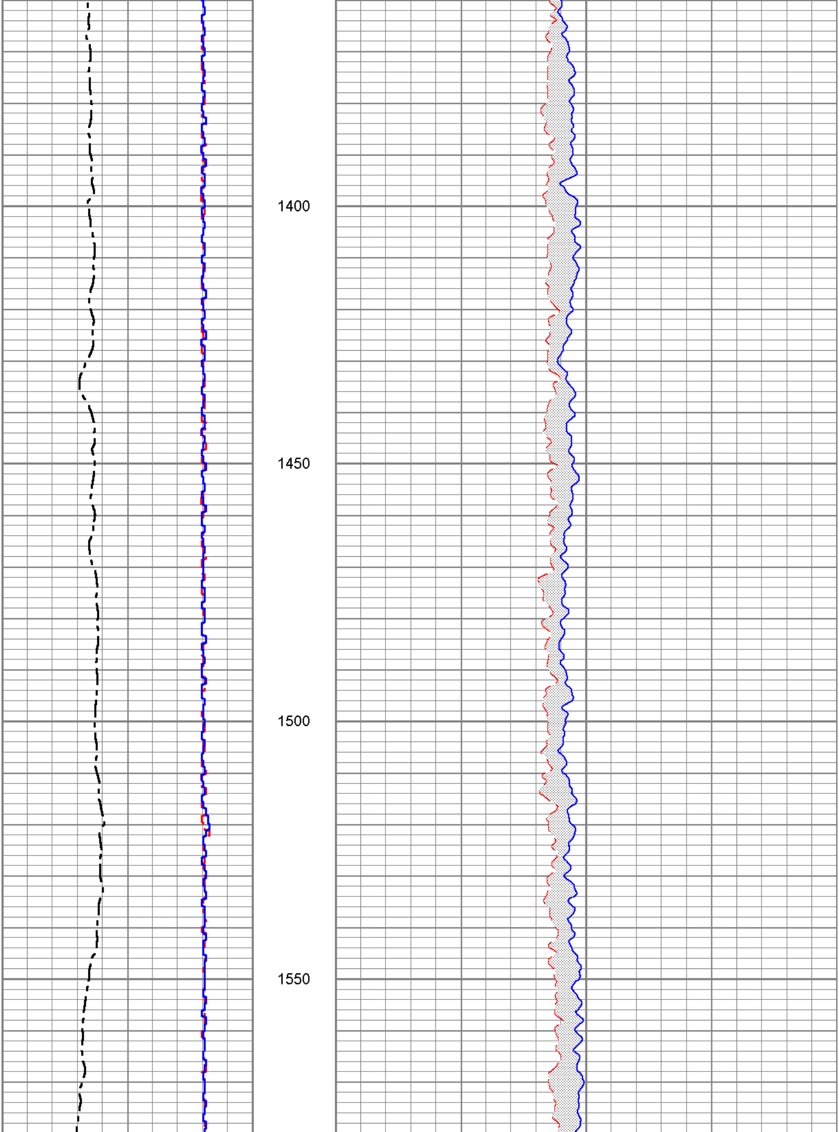

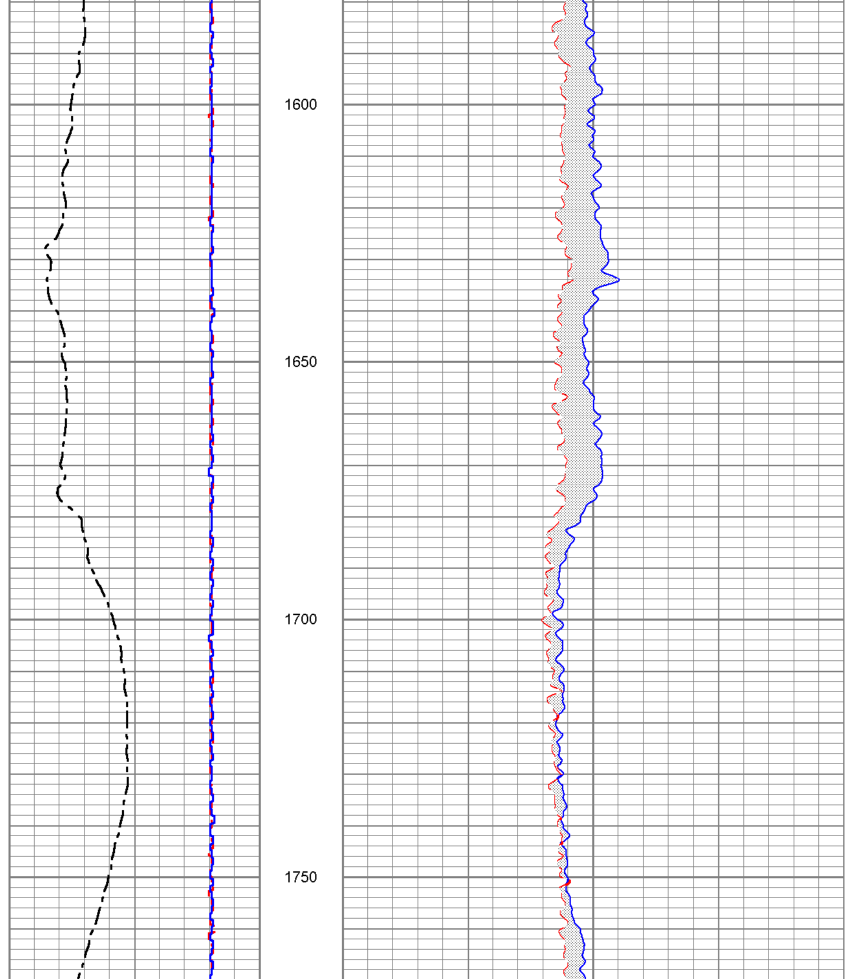

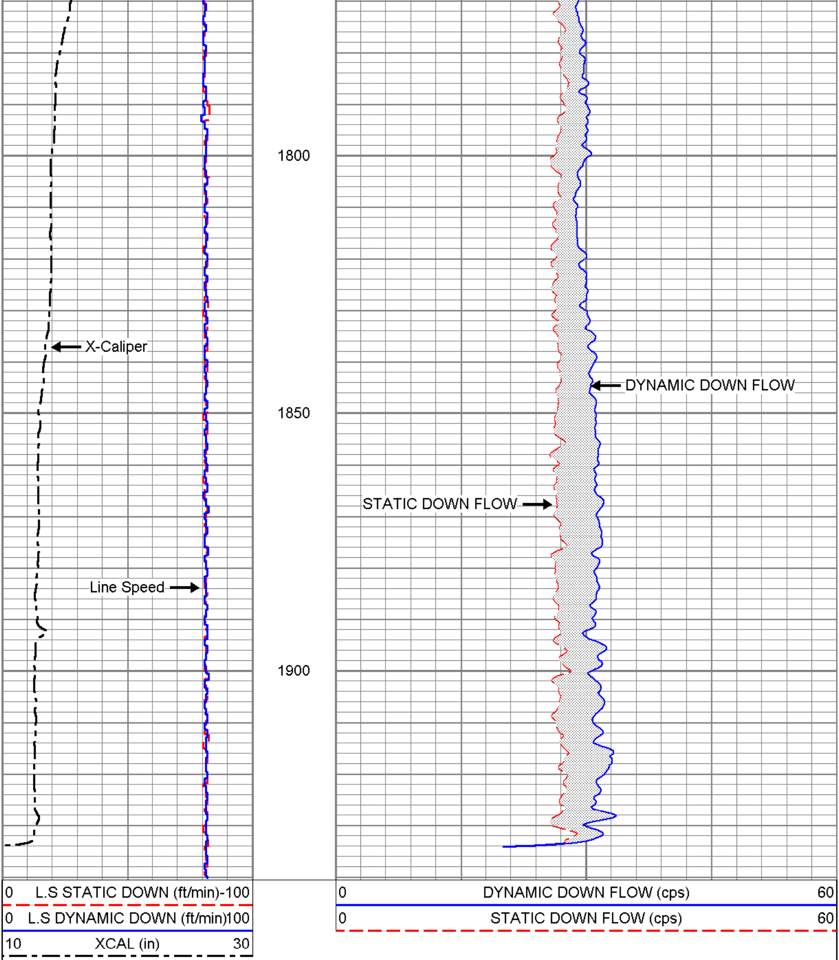

YOUNGQUIST BROTHERS, Inc
GEOPHYSICAL LOGGING DIVISION

FLOWCALS 60,80,100 FPM

Database File:	bellemw1.db
Dataset Pathname:	run4/pass8
Presentation Format:	FLOWCALS
Dataset Creation:	Fri Jun 09 22:28:42 2006 by Log 6.2_B4
Charted by:	Depth in Feet scaled 1:240

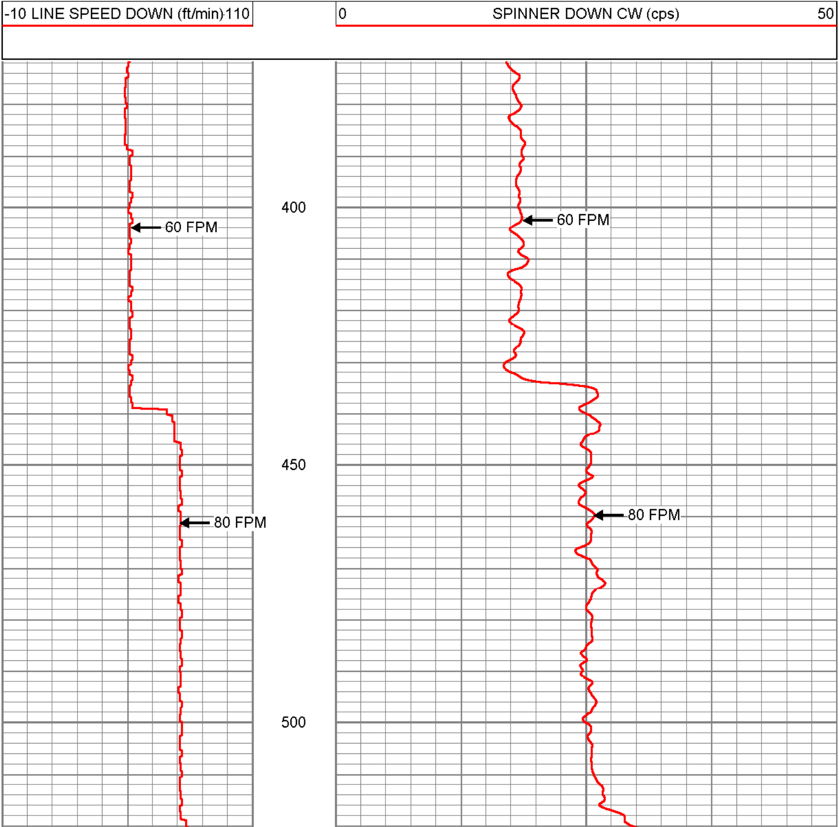

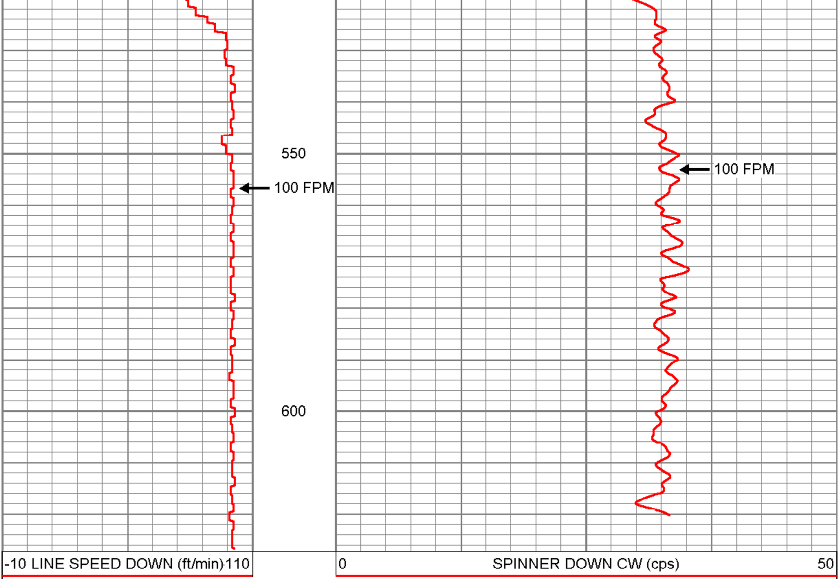

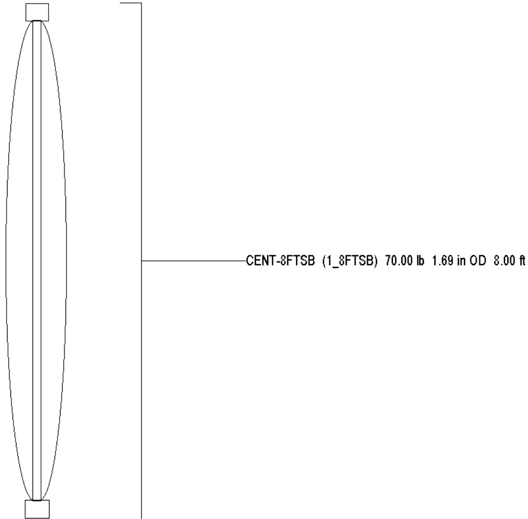

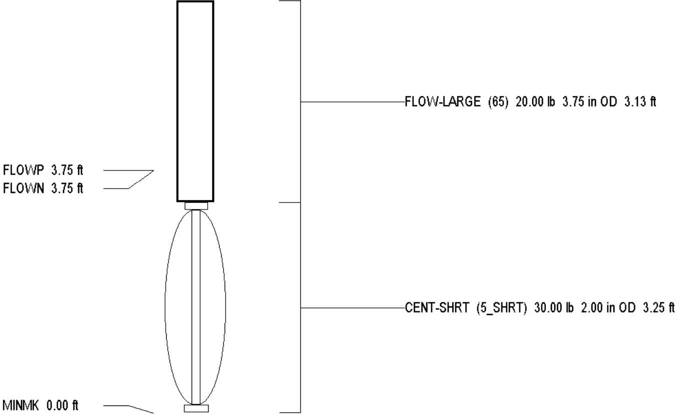
FLOW-LARGE (65) 20.00 lb 3.75 in OD 3.13 ft
FLOWP 3.75 ft
FLOWN 3.75 ft
CENT-SHRT (5_SHRT) 30.00 lb 2.00 in OD 3.25 ft
MINMK 0.00 ft

Dataset: run4/pass10
Total Length: 14.38 ft
Total Weight: 120.00 lb
O.D. 3.75 in