YOUNGQUIST BROTHERS, Inc
GEOPHYSICAL LOGGING DIVISION

FLOWMETER LOG

Company	FLORIDA POWER & LIGHT
Well	PW-1
Field	WEST COUNTY ENERGY CENTER
County	PALM BEACH
State	FL

Company FLORIDA POWER & LIGHT
Well PW-1
Field WEST COUNTY ENERGY CENTER
County PALM BEACH State FL
Location

Other Services: XYC/GR, DIL, FCT

		Elevation
Permanent Datum	PAD	K.B.
Log Measured From	PAD	D.F.
Drilling Measured From	PAD	G.L.

Date	11-SEPT-2007
Run Number	FIVE
Depth Driller	1700'
Depth Logger	1700'
Bottom Logged Interval	1700'
Top Log Interval	CASING
Open Hole Size	22"
Type Fluid	WATER
Density / Viscosity	N/A
Max. Recorded Temp.	N/A
Estimated Cement Top	N/A
Time Well Ready	ON ARRIVAL
Time Logger on Bottom	2000
Equipment Number	103
Location	FT. MYERS
Recorded By	CATHEY
Witnessed By	J. ANDERSEN

Borehole Record				Borehole Record			
Run Number	Bit	From	To	Run No.	Bit	From	To
ONE	58.5"	SURFACE	50'				
TWO	12.25"	CASING	1163'				
	46.50"	CASING	274'				

Casing Record	Size	Wgt/Ft	Top	Bottom
Surface String	48"	.375 W.T	SURFACE	49'
Prot. String	40"	.375 W.T.	SURFACE	270'
Production String	26.50 FRP"	1.25" W.T.	SURFACE	1065'
Liner				

<<< Fold Here >>>

All interpretations are opinions based on inferences from electrical or other measurements and we cannot and do not guarantee the accuracy or correctness of any interpretation, and we shall not, except in the case of gross or willful negligence on our part, be liable or responsible for any loss, costs, damages, or expenses incurred or sustained by anyone resulting from any interpretation made by any of our officers, agents or employees. These interpretations are also subject to our general terms and conditions set out in our current Price Schedule.

Comments

DYNAMIC FLOWRATE = 840 GPM

YOUNGQUIST BROTHERS, Inc
GEOPHYSICAL LOGGING DIVISION

MERGED FLOWMETER

Database File:	fplpw-1.db
Dataset Pathname:	run5/pass11
Presentation Format:	FM_DNMG
Dataset Creation:	Tue Sep 11 21:18:09 2007 by Log 6.2_B4
Charted by:	Depth in Feet scaled 1:240

0 L.S STATIC DOWN (ft/min)-100
0 L.S DYNAMIC DOWN (ft/min)100
10 XCAL (in) 30
0 DYNAMIC DOWN FLOW (cps) 60
0 STATIC DOWN FLOW (cps) 60

0 L.S STATIC DOWN (ft/min)-100
0 L.S DYNAMIC DOWN (ft/min)100
10 XCAL (in) 30
0 DYNAMIC DOWN FLOW (cps) 60
0 STATIC DOWN FLOW (cps) 60

YOUNGQUIST BROTHERS, Inc
GEOPHYSICAL LOGGING DIVISION

FLOW CALS

Database File:	fplpw-1.db
Dataset Pathname:	run5/pass9
Presentation Format:	FLOWCALS
Dataset Creation:	Tue Sep 11 20:58:50 2007 by Log 6.2_B4
Charted by:	Depth in Feet scaled 1:240

-10 LINE SPEED DOWN (ft/min) 110
0 SPINNER DOWN CW (cps) 100

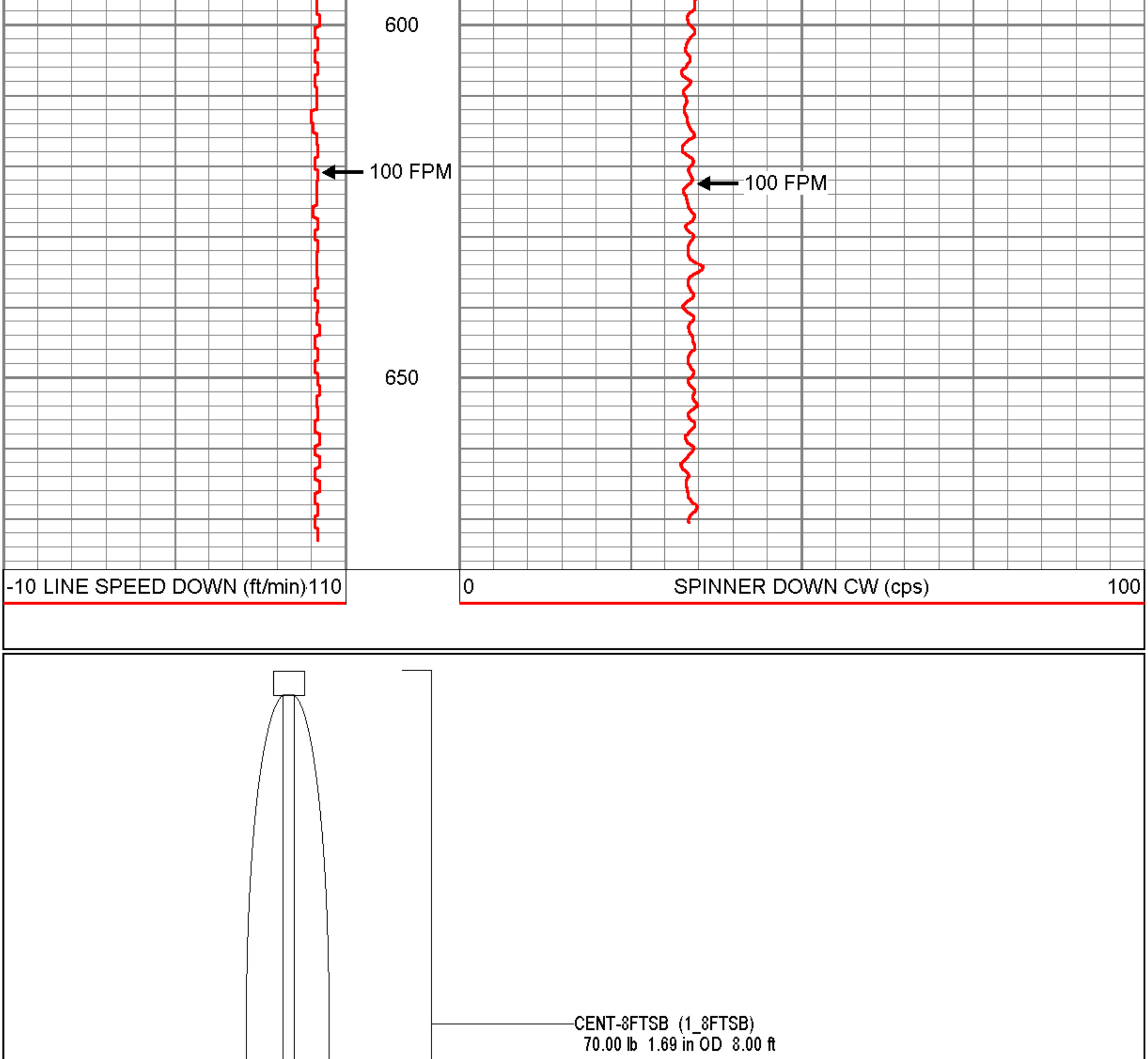

-10 LINE SPEED DOWN (ft/min) 110
0 SPINNER DOWN CW (cps) 100

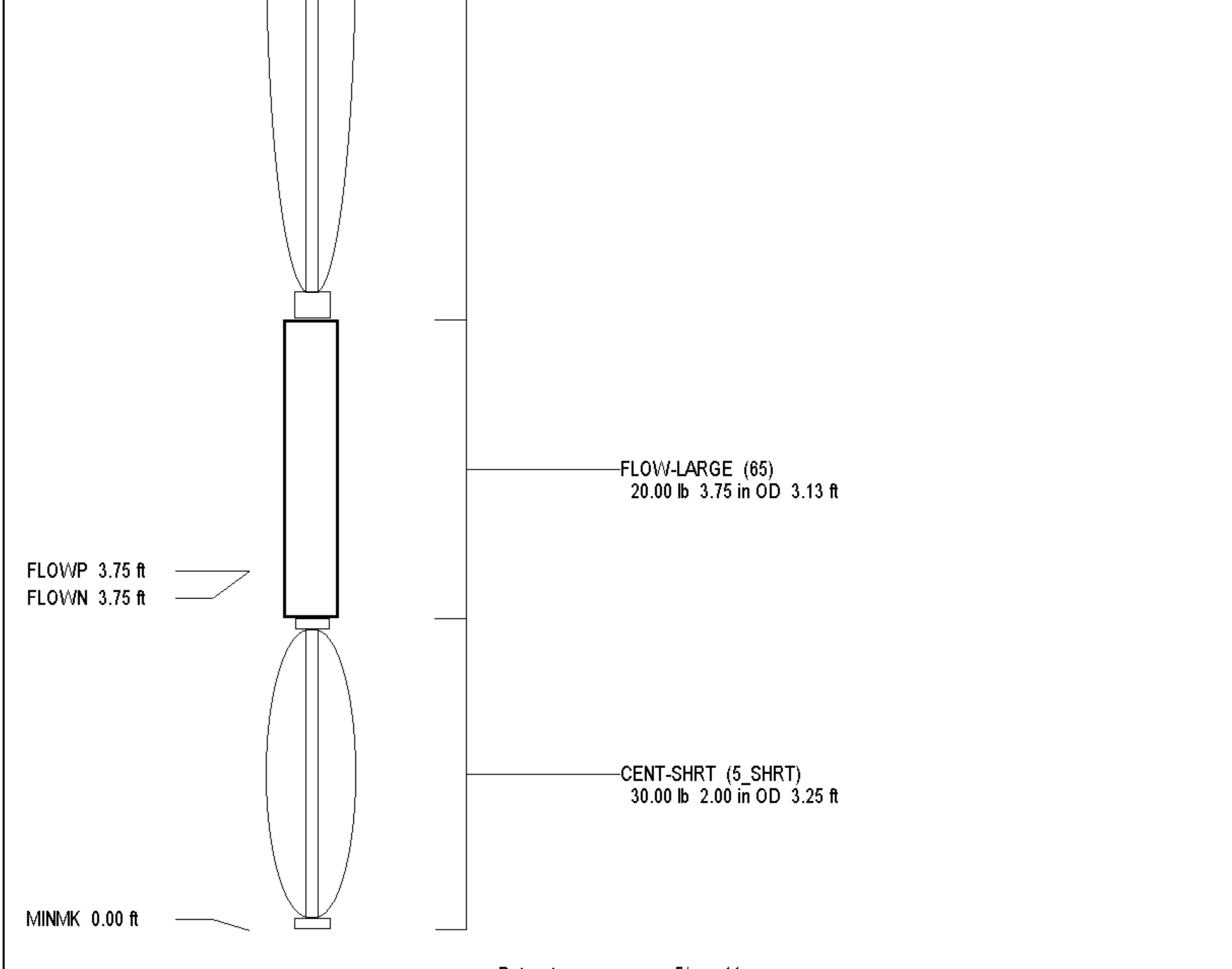

Dataset:	run5/pass11
Total Length:	14.38 ft
Total Weight:	120.00 lb
O.D.	3.75 in