36.221

NORTH FORT MYERS UTILITY INJECTION WELL

HARTMAN & ASSOCIATES, INC.

engineers, hydrogeologists, surveyors & management consultants

MECHANICAL INTEGRITY TEST REPORT

NORTH FORT MYERS UTILITY INJECTION WELL

PREPARED FOR:

NORTH FORT MYERS UTILITY, INC.

PREPARED BY:

HARTMAN & ASSOCIATES, INC.

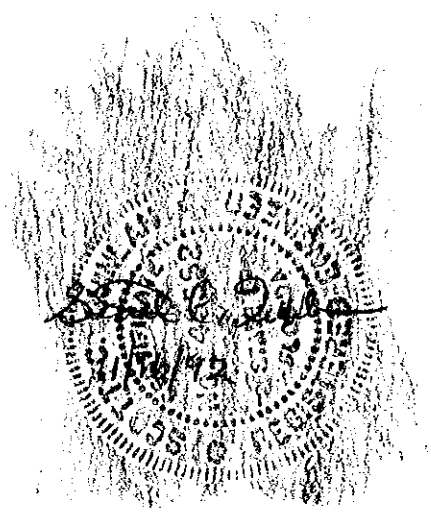

OCTOBER, 1992

HAI#92-164.00

TABLE OF CONTENTS
MECHANICAL INTEGRITY TEST REPORT
NORTH FORT MYERS UTILITY INJECTION WELL

SECTION 1	INTRODUCTION
1.01	General
SECTION 2	VIDEO CAMERA SURVEY
2.01	General
2.02	Downhole Video Survey
2.03	Summary
SECTION 3	RADIOACTIVE TRACER SURVEY
3.01	General
3.02	Radioactive Tracer Survey
3.03	Summary
SECTION 4	CASING PRESSURE TEST
4.01	General
4.02	Mechanical Cleaning
4.03	Pressure Test
4.04	Summary
SECTION 5	SUMMARY AND CONCLUSION
5.01	Summary
5.02	Conclusion

LIST OF FIGURES
MECHANICAL INTEGRITY TEST REPORT
NORTH FORT MYERS UTILITY INJECTION WELL

Figure 1-1 Location Map

Figure 1-2 Injection Well Specifications

Figure 1-3 Well Head Diagram

Figure 4-1 Baker Service Tools Packer Specifications

APPENDICES

Appendix A Video Camera Survey Log

Appendix B Geophysical Logs

B-1 Gamma Ray and Temperature
B-2 Radioactive Tracer Survey

Appendix C HAI Field Notes

Appendix D NFMU Injection Well Permit

SECTION 1

SECTION 1
INTRODUCTION

SECTION 1
INTRODUCTION

1.01 GENERAL

As required by Florida Statute 17-28, injection wells must be tested for mechanical integrity every five years. The mechanical integrity test (MIT) typically consists of a video camera survey, a suite of geophysical logs, radioactive tracer surveys and pressure tests. These tests are used to determine if the injection well casing or cement grout is leaking, and if so, where.

In June 1992, Hartman & Associates, Inc. (HAI) submitted a proposal to conduct a MIT on the injection well at North Fort Myers Utility (NFMU). The location of the injection well is shown in Figure 1-1. The as-built specifications for the well and well head are shown in Figures 1-2 and 1-3, respectively. This test is a condition of NFMU wastewater/effluent disposal permit (injection well permit #U036-191266) and must be completed by December 4, 1992.

In July 1992, NFMU retained HAI to supervise and conduct the MIT on their injection well and to write the report describing the test results and conclusions. HAI retained the services of Layne-Atlantic Company, Inc. to perform the video camera survey, mechanical cleaning and to coordinate the pressure test. HAI also retained the services of Schlumberger to perform the radioactive tracer survey as well as geophysical logging.

This report describes the activities related to conducting the MIT. The activities are described in the order in which they were performed and in such detail that the process of testing and results is fully understood.

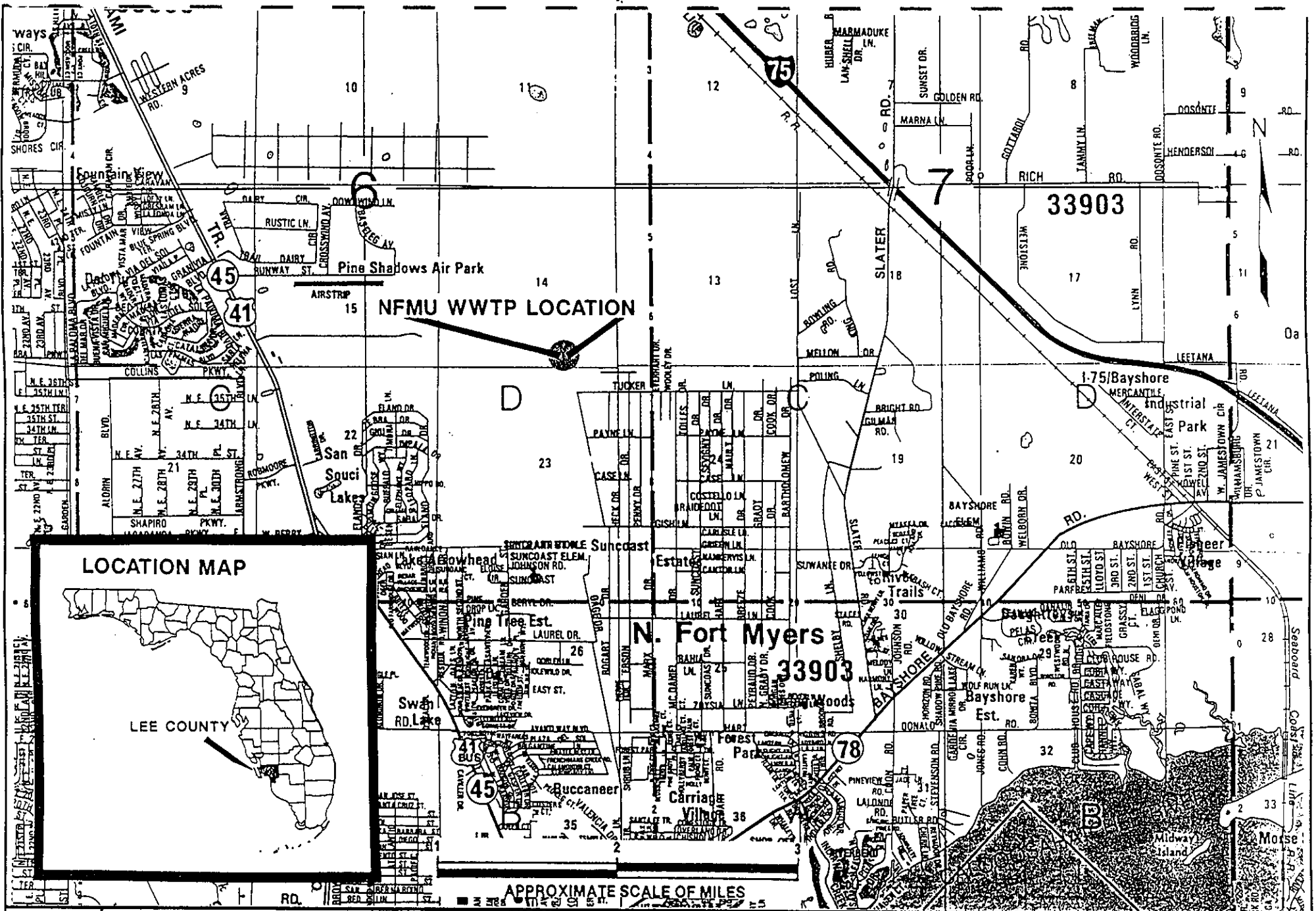

FIGURE 1-1

HARTMAN & ASSOCIATES, INC.
engineers, hydrogeologists, surveyors & management consultants
201 EAST PINE STREET - SUITE 1000 - ORLANDO, FL 32801
TELEPHONE (407) 839-3955 - FAX (407) 839-3790

NORTH FORT MYERS UTILITY
WASTEWATER TREATMENT PLANT

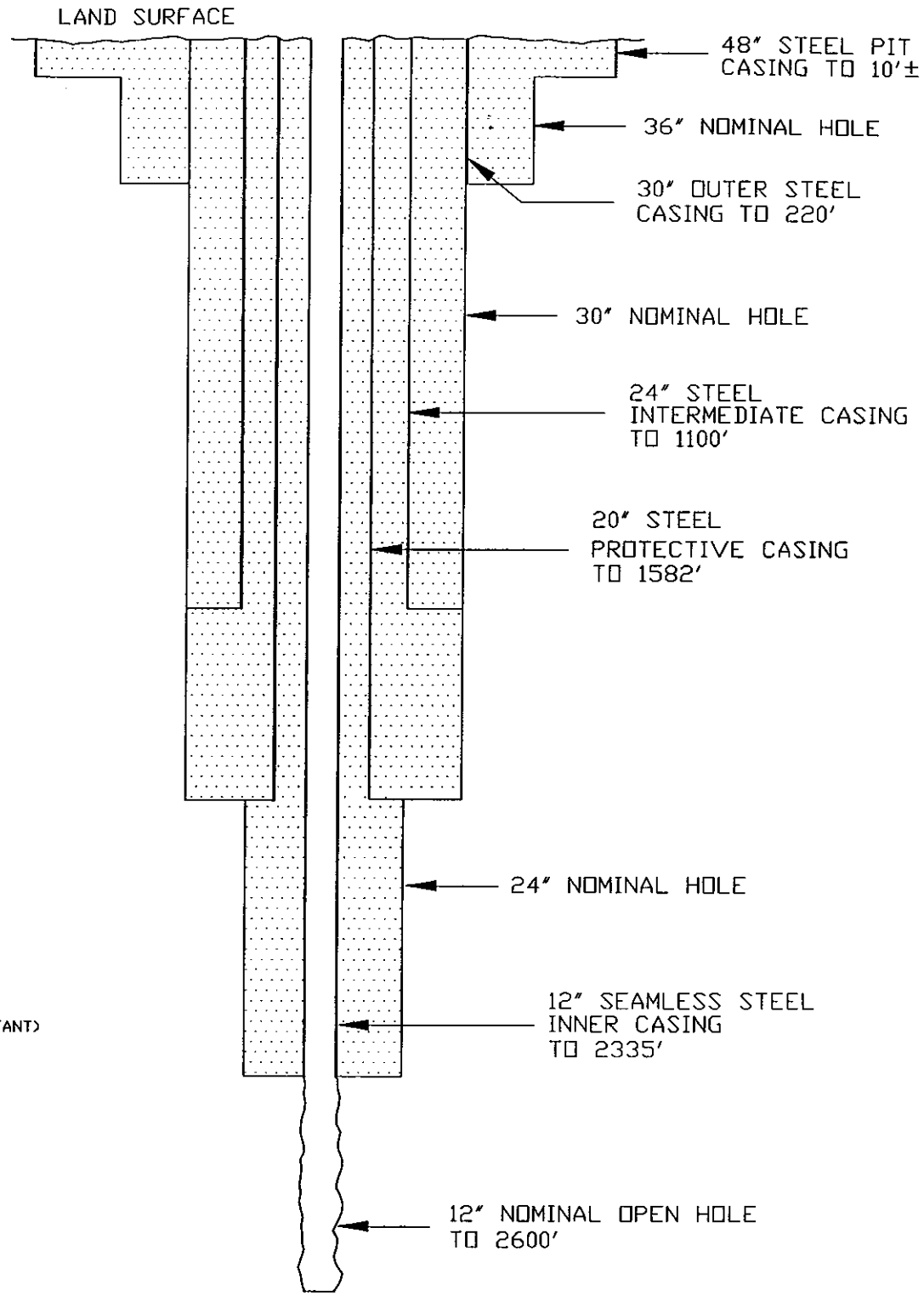

ALL GROUTING IS TYPE II
CEMENT GROUT (SULFUR RESISTANT)
FLORIDA CLASS H

NOT TO SCALE

SOURCE: PBSI NFMU INJECTION WELL AS BUILT SPECIFICATION

HARTMAN & ASSOCIATES, INC.
engineers, hydrogeologists, surveyors & management consultants
201 EAST PINE STREET - SUITE 1000 - ORLANDO, FL 32801
TELEPHONE (407) 839-3955 - FAX (407) 839-3790

AS BUILT INJECTION WELL SPECIFICATIONS

FIGURE 1-2

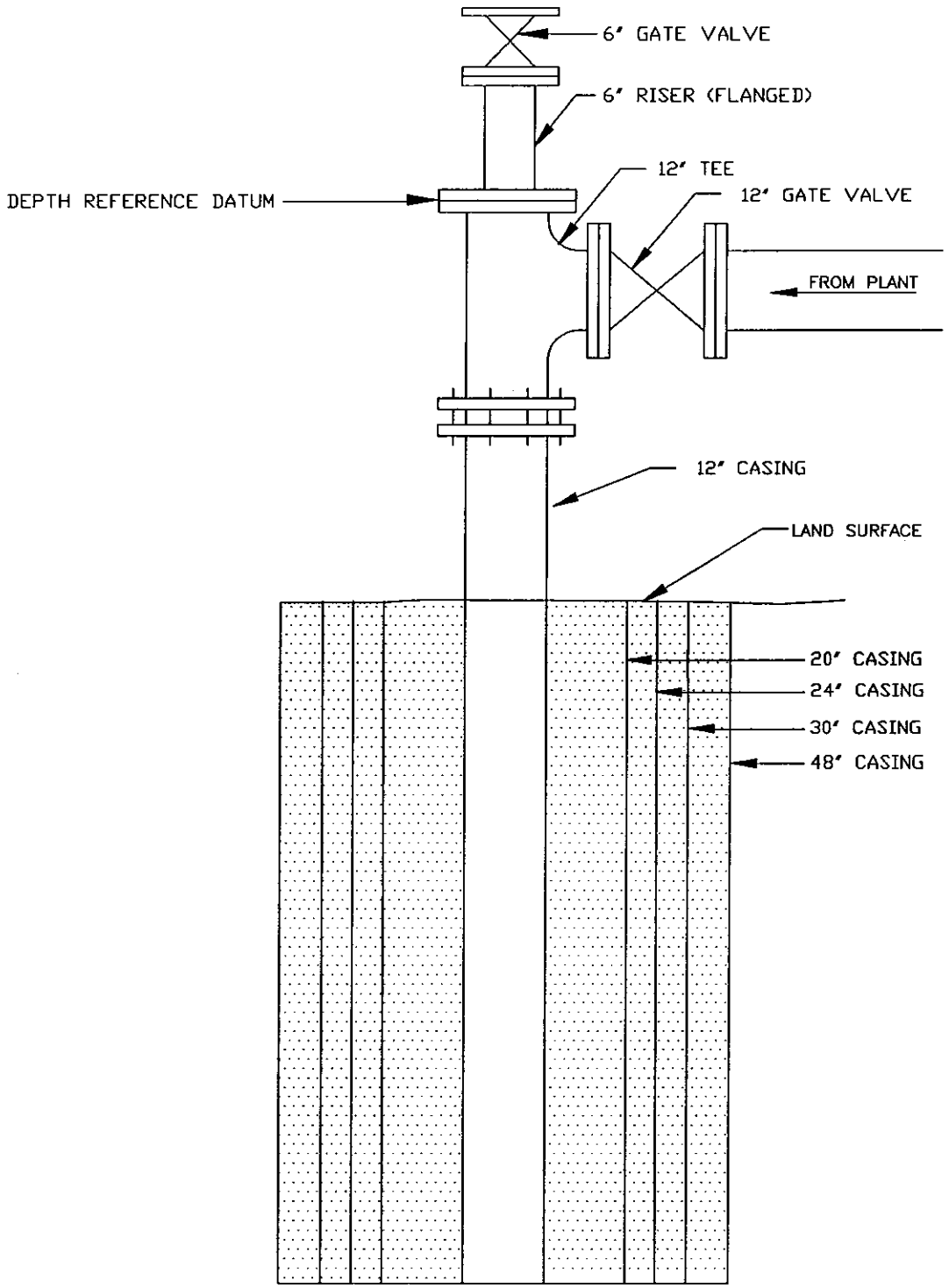

NOT TO SCALE

HARTMAN & ASSOCIATES, INC.
engineers, hydrogeologists, surveyors & management consultants
201 EAST PINE STREET – SUITE 1000 – ORLANDO, FL 32801
TELEPHONE (407) 839-3955 – FAX (407) 839-3790

WELLHEAD SPECIFICATIONS

FIGURE 1-3

SECTION 2

SECTION 2
VIDEO CAMERA SURVEY

SECTION 2
VIDEO CAMERA SURVEY

2.01 GENERAL

On Thursday, July 23, 1992, HAI and Layne-Atlantic arrived on site to perform the video camera survey. The camera depth was set at zero at the top of the 12-inch gate valve as indicated in Figure 1-3. This point was selected as the datum for all work performed during the MIT. All depths reported herein are referenced to that datum.

A video tape copy of the camera survey can be found in Appendix A.

2.02 DOWNHOLE VIDEO SURVEY

The video camera survey was begun at approximately 4:30 p.m. on July 23, 1992. A Laval 4-inch diameter black and white camera with a standard lens was used. The purpose of this survey was to determine the depths of all casing joints, the general condition of the casing, the turbidity in the water, the casing depth and the total depth of the well. Through the video survey, notes of these items were made in three ways:

1. A message was printed on the video tape,

2. Audio messages were recorded on the video tape,

3. HAI representatives kept written notes as video logs were run.

Upon review of the video log, casing joints are spaced 30-35 ft. apart. Bacterial growth and scaling can also be seen to cover the entire length of the casing. This was removed by means of mechanical cleaning before the pressure test was run. Total depth of the casing was recorded at 2,335 ft. with the last casing joint occurring at 2,303 feet. The video logging was completed at approximately 11:30 p.m., July 23, 1992.

2.03 SUMMARY

The results of the downhole video survey showed the casing to be in relatively good shape. Casing joints are spaced 30-35 ft. apart. A buildup of scales and bacterial growth were apparent on the casing from well head all the way to the bottom of casing. No sign of serious gouging, scrapes, or striations can be seen upon review.

It was thus determined that the packer should be set somewhere between the last casing joint at 2,303 feet and the bottom of the casing at 2,335 feet.

A copy of the video log can be found in Appendix A.

SECTION 3

SECTION 3
RADIOACTIVE TRACER SURVEY

SECTION 3
RADIOACTIVE TRACER SURVEY

3.01 GENERAL

At 7:15 a.m., July 24, 1992, HAI arrived on-site at NFMU with personnel from the Schlumberger Company. Test preparation was begun by calibrating the temperature and gamma instruments. Slightly radioactive glauconite sand was used to calibrate the gamma probe.

General test procedures consisted of the following:

1. Running background temperature and gamma surveys from 1,100 ft. to 2,600 ft. below the 12 inch gate valve reference datum.

2. Conducting the static radioactive tracer test by ejecting radioactive dye one foot below the bottom of the casing and holding the instrument in place for one hour while monitoring.

3. Conducting the pumped (injection) radioactive tracer test by ejecting the dye above the bottom of casing while pumping water into the well at a slow rate.

Records of both the temperature survey and radioactive tracer survey can be found in Appendix B.

3.02 RADIOACTIVE TRACER SURVEY

At 8:50 a.m. Mr. Joe Haberfeld of FDER arrived on site to oversee the operation. At 9:00 a.m., Iodine 131 (^{131}I) radioactive dye was loaded into ejector tool. A total of 10 mL was loaded, 5 mL for each ejector port.

From 9:55 a.m. to 10:45 a.m. the temperature survey was run. At 10:50 a.m. the temperature probe was removed and replaced by the gamma and ejector tool.

At 11:30 a.m. the gamma instrument was inserted down the well through the 6-inch gate valve. Background gamma was run from 1,100 ft. to 2,600 ft. as the probe was lowered down the well. Background gamma was run in order to establish a base line to compare with post injection results.

At 11:50 a.m. total depth was reached (2600 ft.). Another background gamma was run from 2,600 ft. to 1,100 ft.. The gamma probe was then lowered to the bottom of casing at 2,335 ft. The ejector port was at 2,335 ft. and the bottom of the tool was at 2347.5 ft.

At 12:35 p.m., 1.0 mCu (millicurie), or 1.0 mL of ^{131}I dye was released through an ejector port. After one minute the upper gamma ray detector (GR), located 2 ft. above the bottom of casing and 3 ft. above the ejector port, measured an increase in radioactivity to 570 GAPI (American Petroleum Institute gamma ray units). The downhole gamma ray detector (GRSG), located below the ejector port, also measured an increase to 180 GAPI.

At 12:49 p.m. the GR count was 500 GAPI and the GRSG count was 228 GAPI.

At 12:53 p.m., Mr. Haberfeld instructed to hold the gamma probes position at this depth until 1:35 p.m. (one hour after releasing dye).

The following gamma ray counts were measured while remaining at this depth:

Time	GR Count	GRSG Count
1:05 p.m.:	GR 170 GAPI	GRSG 131 GAPI
1:13 p.m.:	GR 440 GAPI	GRSG 140 GAPI
1:21 p.m.:	GR 443 GAPI	GRSG 130 GAPI

At 1:35 p.m., a gamma log was run while the probe was raised from 2354.5 ft. to 2219.5 ft..

At 1:42 p.m., the probe was run back to 2435 without logging. The probe was then run back through the interval to 2341 ft. in order to find out where the bottom of the dye zone was located.

At 2:25 p.m. non-potable water was injected into the well at 1500 gpm (38 psi) in order to flush the well. At 2:36 p.m. the pump was shut off and the valve closed.

At 2:46 p.m. the gamma probe was lowered to 2450 ft. then raised to 2240 ft. for post pump logging. The ejector was then reset at 2329 ft., 6 ft. above the bottom of casing. At this time a hose was attached to a bib located on the well head. From there water was injected into the well at 8 gpm (1.4 ft./min. down hole velocity).

At 3:01 p.m. 1.0 mCu of ^{131}I dye was released into the well. The GR count went off-scale and the GRSG count increased then decreased.

At 3:10 p.m. counts for both detectors decreased. Radiation was moving downhole with flow.

At 3:18 p.m. the gamma probe was logged out of position up to 2218 ft.. Top of radiation was found at 2328 ft., approximately 8 ft. up hole from the 3:01 p.m. ejection point.

At 3:33 p.m. the probe was reset to a depth of 2342 ft.. The well was once again flushed with non-potable water for 10 minutes at a rate of 1500 gpm. The radioactivity was flushed past the gamma detection too fast to be logged. After 10 minutes of flushing the GR count was 95 GAPI and the GRSG count was 75 GAPI.

At 3:44 p.m. the probe was moved to 2600 ft. (total depth). From here the gamma probe was moved back up the well to 1,100 ft. and logged. Some residual radioactivity, probably sticking to encrustations on casing, was found at 2335 ft..

At 4:17 p.m., the probe was lowered to 2400 ft. without logging and the remaining dye ejected. Non-potable water was then injected into the well at 1,500 gpm in order to flush the well.

At 4:30 p.m. the test was complete and Mr. Haberfeld left site. At 4:45 p.m. the probes trip out of the hole was complete.

3.03 SUMMARY

The 1.0 mCu of ^{131}I dye was ejected under static conditions at 12:35 p.m. The radioactive dye moved slightly up the well probably as a result of temperature differences between the dye and the water it was being injected into.

The dye was loaded into the gamma probe at 9:00 a.m. and remained in the sunlight until insertion down the well at 11:30 a.m. When the dye was ejected it was probably warmer than the water, therefore it rose.

The increase and decrease in radioactive count rate suggests that a residual circulation remained after flushing, probably due to dye sticking to encrustations on the casing. There was no indication of uphole or downhole movement of dye.

SECTION 4

SECTION 4
CASING PRESSURE TEST

SECTION 4
CASING PRESSURE TEST

4.01 GENERAL

This test was conducted using a single Baker Service Tools packer after the casing was mechanically cleaned. The packer was set roughly 23 feet above the bottom of the casing (2,312 feet), the well head sealed off, and the packers and annulus pressured up separately. The annulus and packer pressures were monitored independently.

The annulus was pressured up to a minimum of 129 psi and held for one hour with less than a ±5% change in pressure.

A pressure test attempted on the evening of Thursday, October 8, 1992 was unsuccessful due to a leaking packer. This test was witnessed by Mr. Vince Mele from FDER, Mr. Ralph Palmer from Layne-Atlantic and Mr. Bill Wasson from HAI. A second test was conducted the following Wednesday, October 14th.

4.02 MECHANICAL CLEANING

On Monday, October 5, 1992 Layne-Atlantic arrived on site at NFMU to set up equipment to brush the well clean before the pressure test was run. On Tuesday, October 6th, the injection well was taken off line and the head pressure in the well "killed." The term killed means to lower the water level in the well to an elevation far below the top of the well casing. The well is "killed" by preparing and injecting a brine solution down the well. The heavier brine solution lowered the head pressure of the well due to density difference between the liquids. The well was killed to approximately 32 feet below the top of the casing at 2:15 p.m., October 6th.

The mechanical cleaning involved using a cable tool rig to repeatedly lower and raise (in short strokes) a wire brush as it descended down the well. The brush was made of 6-inch diameter pipe with hard but flexible steel wires approximately 4-inches long welded to the 6-inch pipe. The wires are pieces of cable unwound to flair out and were found to be of acceptable stiffness. The wires were spaced at intervals such that all of the casing would be brushed

clean. The brush was tripped in and out just once. This was felt to be sufficient because of the design of the brush. Mechanical cleaning was completed at 7:04 p.m. on October 7, 1992.

4.03 PRESSURE TEST

On Tuesday, October 13, 1992 at 10:00 a.m., HAI arrived on site. Layne-Atlantic and Baker Service Tools were already on site rigging up their equipment. From 9:00 a.m. to 10:00 a.m. the well was killed to roughly 25 feet below the well head. During this time the tubing joints were measured. Seventy two (72) tubing joints were measured and totalled 2259.56 feet. This sum along with 61.15 ft. of attachments, including packer, tallied to approximately 2,320.71 ft. The packer was set between the interval of 2,309.92 ft. and 2313.5 ft. A diagram of the packer is shown on Figure 4-1.

Before attaching the first tube the packer will be lowered down the well and filled with water. Once filled, the first tube was attached, lowered down the well and filled with water. This procedure continues until all seventy-two (72) rods were attached. This reduced the time required to pressure the tubing. The tubing was pressurized with water.

At 10:30 a.m. Layne-Atlantic began to trip the packer down the well. At 3:10 p.m. the final tubing joint was attached and the well head made ready for sealing. At 4:00 p.m. the packer was pressurized with water to 400 psi with a pump provided by Layne-Atlantic.

The annulus was then pressurized to 129 psi and the well head sealed off. Pressure in the annulus was measured by a gauge provided by Layne-Atlantic and calibrated by Blue Ribbon I.C.C. of Winter Park, Florida on October 2, 1992.

From 4:30 p.m. to 5:30 p.m. a trial pressure test was run with a loss in pressure of only 0.006%. Another test was run on the morning of October 14th to ensure pressure will hold before the official test is witnessed by FDER.

On October 14, 1992, HAI, Layne-Atlantic, and Baker Service Tools were on site at 7:00 a.m. At 7:30 a.m. the packer and annulus were pressurized to 400 psi and 130 psi, respectively. For one hour the pressure held in the annulus with no change in pressure.

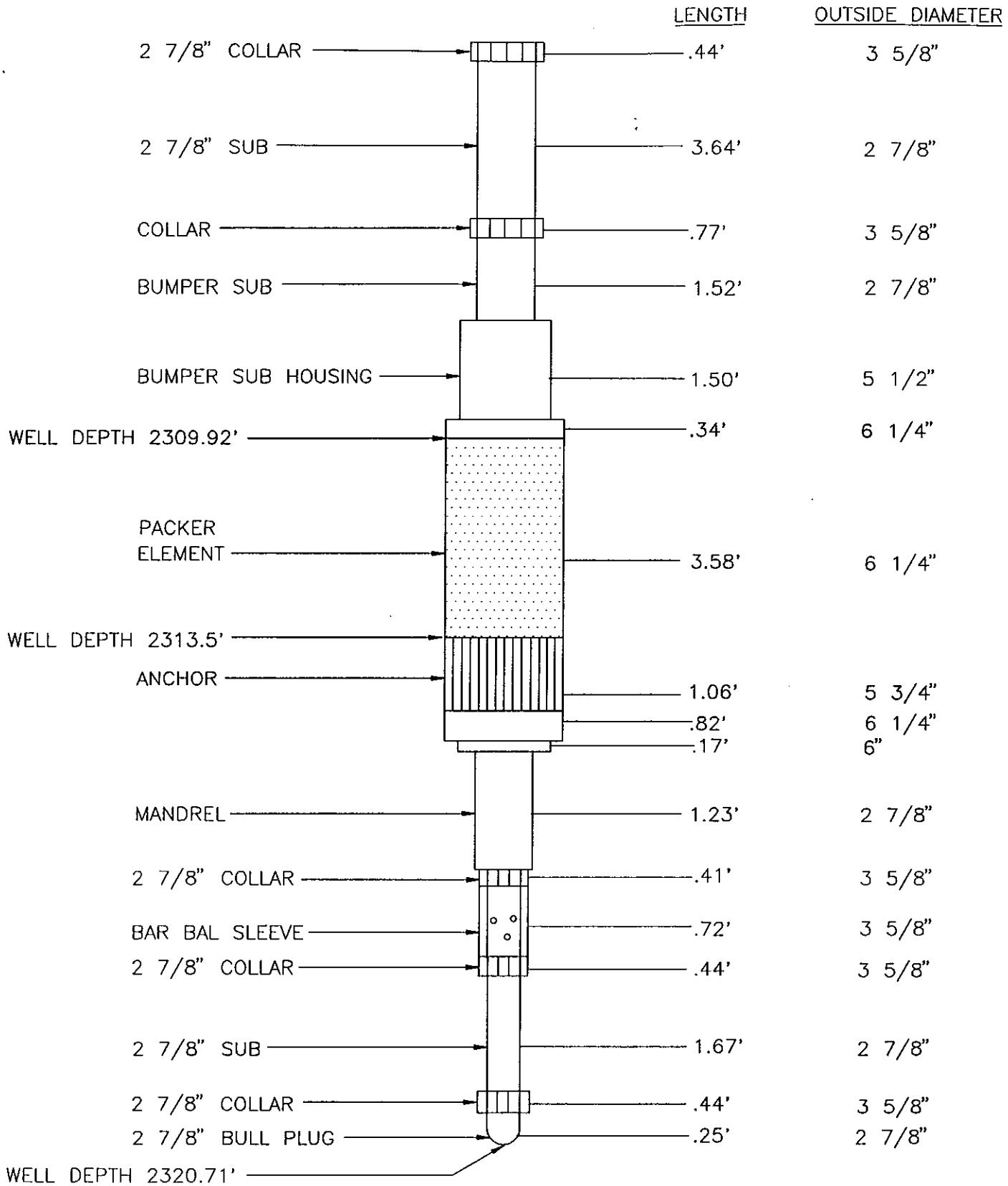

NOT TO SCALE

HARTMAN & ASSOCIATES, INC.
engineers, hydrogeologists, surveyors & management consultants
201 EAST PINE STREET – SUITE 1000 – ORLANDO, FL 32801
TELEPHONE (407) 839-3955 – FAX (407) 839-3790

BAKER SERVICE TOOLS PACKER SPECIFICATIONS

FIGURE 4-1

At 8:45 a.m. Vince Mele of the FDER, Fort Myers was contacted and invited out to inspect the pressure test. He informed HAI that a representative of the FDER would be on site as soon as possible.

At 11:45 a.m., Mr. Richard Orth from the FDER arrived on site to inspect the pressure test. The 130 psi of pressure from 7:30 a.m.'s pre-test still held. One pound of pressure was bled off to show Mr. Orth pressure was being applied. The official pressure test began at 11:47 a.m. at 129 psi. Pressure decreased slightly until 46 minutes into the test when the packer relaxed and pressure was lost.

From 12:34 p.m. to 12:40 p.m. the packer and annulus were again pressurized. This time the test would begin with an annular pressure of 130.2 psi. At 12:44 Mr. Orth restarted the pressure test. Every five minutes thereafter the pressure was recorded. After an hour, there was only a 1.55% increase in pressure, which was most likely caused from an increase in temperature on the well head.

Mr. Orth approved the test procedure and passed the test. The MIT was successful at 1:44 p.m., October 14, 1992.

Mr. Richard Orth from FDER, Mr. Ralph Palmer from Layne-Atlantic, and Mr. Bill Wasson from HAI witnessed the test and results. HAI left site at 2:00 p.m. Layne-Atlantic and Baker remained on site to trip the packer out of the well. Once removed, Layne-Atlantic reassembled the injection well and cleaned up the site.

4.04 SUMMARY

On October 6, 1992 the well was killed and mechanical cleaning was began. On October 7, 1992 the cleaning was completed and preparation for a pressure test were made. After the first pressure test was unsuccessful, a second test was conducted on October 14, 1992 and passed by Mr. Richard Orth of FDER, Ft. Myers.

SECTION 5

SECTION 5
SUMMARY AND CONCLUSION

SECTION 5
SUMMARY AND CONCLUSIONS

5.01 SUMMARY

On July 23, 1992, a video log of the 12-inch diameter injection well at North Fort Myers Utility was initiated. The results of the downhole video survey showed that the steel casing had a build up of scale and bacterial growth. Despite the build up and growth, however, the video log showed that the casing is in good condition.

On July 24, 1992, a temperature survey and radioactive tracer survey were run. The temperature survey was completed before running the radioactive tracer survey.

A total of 10 ml of ^{131}I radioactive dye was loaded into the gamma probe to be ejected into the well. The probe was then inserted down the well while running a background gamma log. The dye was released on two separate occasions and gamma logs run in order to determine if an uphole or downhole movement existed in the well. The results showed no indication of uphole or downhole movement of radioactive dye.

On October 7, 1992 the well casing was mechanically cleaned by lowering a stiff wire brush down the well and retrieving it after it had reached the bottom of casing.

On October 8, 1992 a pressure test was attempted but failed due to equipment problems. The test was postponed until October 13, 1992.

On October 13, 1992, Layne-Atlantic, Baker Service Tools and HAI arrived on site to prepare for the second pressure test. The well was killed and the packer tripped down the well and set at 2,312 feet, nine feet below the last casing joint.

At 4:30 p.m. the annulus was pressurized to 129 psi and the well head sealed. After one hour the pressure dropped a total of 0.8 pounds (0.006%). With this successful pre-test, the official pressure test was scheduled for October 14, 1992.

On October 14, 1992, after conducting additional pre-tests, the official test was begun at 12:44 p.m. as directed by Mr. Richard Orth of FDER. The initial pressure was 130.2 psi (approved

by Mr. Orth) and increased to only 132.2 psi after one hour. Because measured pressure changes did not exceed the ±5% allowable change, Mr. Orth approved the test results that showed no casing leaks.

The increase in pressure from 130.2 psi to 132.2 psi was most likely due to the increase in the temperature of the well head from the intensity of the sun.

5.03 CONCLUSION

The single packer test run by HAI, Layne-Atlantic, and Baker Service Tools conclusively shows that no leaking is occurring in the interval tested.

HAI would like to thank the following people for their work and cooperation in the successful completion of this project.

NFMU, Inc.

Mr. Gary Long

Layne-Atlantic Company, Inc.

Mr. Tom Salter
Mr. Ralph Palmer
Mr. George McCroy
Mr. Gerald Howard
Mr. Paul Collery
Mr. David Fuller
Mr. Bill Long

Schlumberger Well Services

Mr. Mike Wells

Mr. Curtis Ford

Mr. Clyde Gosset

Baker Service Tools

Mr. E.H. Hood

HAI

Mr. Charles W. Drake, P.G.

Mr. W. Bruce Lafrenz, P.G.

Mr. Bill Wasson

Representatives listed above from HAI were each on site for different aspects of this project.

APPENDIX A

APPENDIX A
VIDEO CAMERA SURVEY LOG

APPENDIX B

APPENDIX B
GEOPHYSICAL LOGS

APPENDIX B-1
GAMMA RAY AND TEMPERATURE

DATE	1-1-1970
TIME	00:00:00
SERIAL NUMBER	0000
CASING	0
TUBING	0
PRESSURE	0
TEMPERATURE	0
FLOW RATE	0
PRESSURE 2	0
TEMPERATURE 2	0
FLOW RATE 2	0
PRESSURE 3	0
TEMPERATURE 3	0
FLOW RATE 3	0
PRESSURE 4	0
TEMPERATURE 4	0
FLOW RATE 4	0
PRESSURE 5	0
TEMPERATURE 5	0
FLOW RATE 5	0
PRESSURE 6	0
TEMPERATURE 6	0
FLOW RATE 6	0
PRESSURE 7	0
TEMPERATURE 7	0
FLOW RATE 7	0
PRESSURE 8	0
TEMPERATURE 8	0
FLOW RATE 8	0

THIS DOCUMENT IS THE PROPERTY OF HALLIBURTON ENERGY SERVICES, INC. AND MUST BE RETURNED TO HALLIBURTON ENERGY SERVICES, INC. UPON REQUEST. THIS DOCUMENT MAY NOT BE REPRODUCED OR DISTRIBUTED WITHOUT THE WRITTEN PERMISSION OF HALLIBURTON ENERGY SERVICES, INC.

CUSTOMER	
WELL	
FIELD	
COUNTY	
STATE	
COMPANY	
FORMATION	
TYPE WELL	
TYPE JOB	
TICKET NUMBER	
DATE	
CREW	
DATA TYPE	
DATA FORMAT	
TOOL TYPE	
TOOL SERIAL NUMBER	
TOOL DEPTH	
BOTTOM HOLE TEMPERATURE	
HOLE SIZE	
HOLE DEVIATION	
CASING SIZE	
CASING WEIGHT	
CASING DEPTH	
TUBING SIZE	
TUBING WEIGHT	
TUBING DEPTH	
PACKER DEPTH	
PERFORATIONS	
PRESSURE GAUGE	
PRESSURE RANGE	
TEMPERATURE GAUGE	
TEMPERATURE RANGE	
FLOW METER	
FLOW RANGE	
CHOKE	
CHOKE SIZE	
CHOKE TYPE	
CHOKE DEPTH	
SAMPLE TYPE	
SAMPLE SIZE	
SAMPLE PRESSURE	
SAMPLE TEMPERATURE	
SAMPLE FLOW RATE	
SAMPLE TO	
SAMPLE FROM	
SAMPLE TO	
SAMPLE FROM	
SAMPLE TO	
SAMPLE FROM

APPENDIX B-2
RADIOACTIVE TRACER SURVEY

[illegible]

[illegible]

[illegible]

[

APPENDIX C

APPENDIX C
HAI FIELD NOTES

92-164.00 7/23/92

PHOTOS

7/23

1330 1 TW BEFORE OPS
1340 2 REMOVING VENT & VALVE ASSEMBLY
1510 3 FEEDING CABLE FOR LOGGER
1515 4 SETTING UP VIDEO LOGGER
20 5 " " " "
1525 6 " " " "
1615 7 VIDEO COLLAR ON TW
8 SCHLUMB SETTING UP 7/24
7?? 9 "
10 BOOS - TOP BOTTOM FOR COLLAR CHUCK NOTEBOOK
11 INTERIOR
12 INT. OFF INTO PRONG
13 " " " "
14 BOOM AT MAX HEIGHT
15 " " " " WITH TOOL
16 SHORELINE
17
18
19
20
21
22

EF - CLEARING

NFMU 92-164.00 7/23/92

12.00 ON SITE - GARY LONG HAD LIGHT FOR WATER, RAY BIRCH TOOK ME OVER TO THE TW SITE.

I CALLED RAY - HE SAID HIS FOLKS HAD LEFT AT 8:00 AM - SHOULD BE HERE SHORTLY.

RAY GAVE ME A TOUR OF THE PLANT

1320 COX, STRAND ON SITE - AT INTAKE (HARSE) SETTING UP EQUIPMENT
1340 CALLED CHUCK
1350 GARY LONG ON SITE OFF - 1353 LEAVE - REMOVED VENT ASSEMBLY
1400 (SHARE) SETTING UP VIDEO COLLAR & PROBES
1415 VIDEO COLLAR ASSEMBLED - SETTING UP LOGGER
1430 BREAK FOR RAIN SQUALLS
1505 BACK AT IT & SETTING UP VIDEO LOGGER

92-164.00 7/23/92

~~8/19 9 - 5511~~ $39 HIGH PR BRIDGE

7:00 MICKEY WIBLER?

41 BUS 41 WALKER

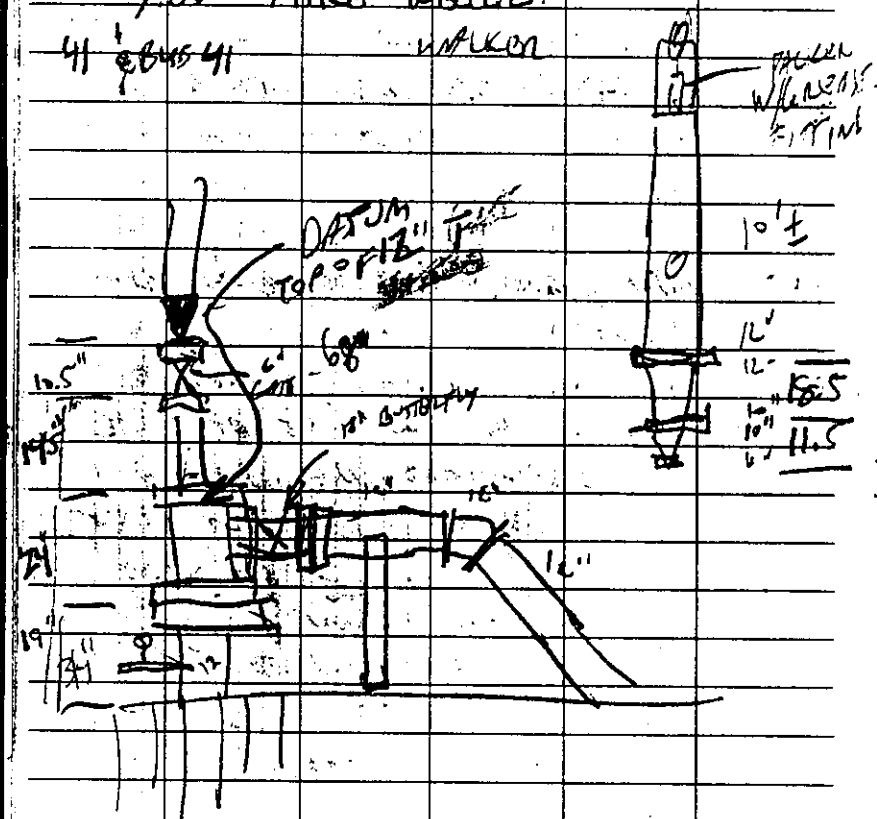

NFMU 92-164.00 7/23/92

1528	ANOTHER RAIN BREAK
1600	STILL RAINING - TALKED TO COY ABOUT CONTINUING BUT HE SAID HE NEED DRY CONDITIONS TO INSTALL HIGH PRESSURE LIGHT - CAN'T HAVE ANY WATER etc on LAMPHOLES WITHOUT DIRECT CONSEQUENCES
1605	BACK AT IT - RAIN STOPPED
1610	GALY LAKE ON SITE - THEY MAY NEED TO USE INT WELL TONIGHT BECAUSE OF RAIN - HIS BLADE SIDES MAY NOT HOLD MORE EFFICIENT. GALY SAID THAT THEY CAN STORE GOLFBALL IN CONTROL CHAMBER GOLFBALL IN TIMBERTEK AND IF TO LOOK GALY LAKING BOAT (CLARIFIER) TOLD HIM THAT WE WILL NEED ABOUT 5 MORE HOURS TONIGHT AND THEN THEY WILL CALL US VERY AGAIN
1624	OPEN 6" GATE - SOME LOOKING AT 12" COLLAR

92 164 00 7/23/92 NFMU

JOINT	ft	TIME COMMENTS
Above 1	0	SOME DEBRIS (GROWTH?) on SIDES of 6"
		MUCH SCALE ON WALLS MAY BE 1/4" or MORE THICK
		SC. CLOUDY W/ PART.
?	50	VERY LARGE CONCRETIONS WATER IS CLEAR
1	56	VERY HEAVILY CRUSTED
	70	SOME VERTICAL STRIATIONS (PH INDICATORS, ACTIVITY)
2	89	CLEANING UP ON SCALE STILL HEAVY BUT FEWER CONC.
3	122	STILL HEAVY SCALE
?	151	? OBJECT - ~2" LONG STICKING OUT from CASING
4	154	CLEAN JOINT BUT STILL HEAVY SCALE

92 164.00 7/23/92 NFMU

1635	CAMERA SET UP
1646	HUNG AT 6" - 12" JOINT BULB OUT! TAKING VIDEO COLOR SET TO CLEANING BULB - 30 MIN?
1713	START AGAIN
	MISSING SOME OF VIEW DUE CASING BELOW OF 6" CONC.
	10-12 PPM
	AT 43 - STOPPED TO BUILD PAD FOR WELL SPOOL
1728	~~[illegible]~~ ft
1747	258 ft
1756	352 ft
1820	606 ft
1835	756 ft
1954	BREAK TO OFFICE
2002	BACK AT IT
2038 - 2133 ft	

92164001 7/23/92 NPMU

JOINT	ft	COMMENT
5	186	SCALE BUT CLEARER ON JOINT
	210	JOINT? OR CIRCULAR SCALE
6	216	JOINT? NOT AS CLEAR AS PREVIOUS
7	248	LARGE NOTICEABLE SEAM SMALLER AND LESS FREQUENT
	272	VERTICAL SEPARATION
8	281	JOINT
9	309	JOINT? CLEARER
10	342	JOINT
11	374	JOINT
12	405	JOINT
13	434	JOINT

92164001 7/23/92 NPMU

JOINT	ft	COMMENT
	451	FUNNY NOTE ONLY
	463	SCALE - FLAKED OFF
14	466	JOINT
15	499	JOINT
16	532	JOINT
17	566	JOINT COMMENT CLEANER
18	599	JOINT
19	628	JOINT
20	661	JOINT
21	697	JOINT
22	726	JOINT
23	756	JOINT

92-16400 7/23/92 NFMU

JOINT	Ft.	COMMENT
24	787	JOINT
25	818	JOINT
26	849	JOINT
27	880	JOINT
28	916	JOINT
29	938	START JOINT
30	969	JOINT
31	1001	JOINT
32	1033	JOINT
33	1061	JOINT
34	1091	JOINT
35	1124	VERY FAINT TRACE JOINT

92-16400 7/23/92 NFMU

JOINT	Ft	Comm
36	1157	JOINT
37	1188	JOINT
38	1220	JOINT
39	1254	JOINT
40	1286	JOINT
41	1319	JOINT
42	1351	JOINT
43	1381	JOINT
44	1412	JOINT
45	1444	JOINT
46	1476	JOINT
47	1508	JOINT
48	1539	JOINT
49	1571	JOINT
50	1603	JOINT — POOR LANGUAGE
51	1635	JOINT CONNECTIONS
52	1662	JOINT
53	1695	JOINT
54	1728	JOINT
55	1760	JOINT
56	1792	JOINT
57	1824	JOINT
58	1853	JOINT
59	1885	JOINT
60	1918	JOINT

92164.00 7/23/92 NFMU

JOINT	Ft.	COMMENT
61	1949	JOINT
62	1982	JOINT
63	2014	JOINT
64	2047	JOINT
65	2077	JOINT
66	[illegible]	JOINT
67	2140	JOINT
68	2174	JOINT
69	2205	JOINT
	2222	SCALE FLAKING HAS LEFT APPEARANCE OF HORIZONTAL CRACKS
70	2238	JOINT
71	2271	JOINT
72	2303	JOINT
	2334	MORE "DEEP" SEAMED CORRESIONS
	2335	B.O.C. GROUNDLEVEL EVIDENT
	2336	FLAT FORM, POROUS
	2346	CAN.
	2349	CAN.
	2360	NATIVE
	2370	CAN.

92164.00 7/23/92 NFMU

2055 2385 - BOTTOM OF CASING

921640D 7/23/92

AL	COMMENT	NFM
2374-75	CAV.	
2391	FRACTURE	
2410	CAV.	
2417 & 2422	BIG CAV.	FM CH.
2440	DARK FM	
2462	FRACT	
2474	FRAG	
2485	"	
2486	"	
2504	"	
2510	CAV	
14	FRACT	
2516	FM CHANGE	STREAKING
2523	CAV	
2528	BLOCKAGE LOOKS LIKE PARTS SLUMPING IN FROM LAYER	

921640D 7/23/92 NFM

2130	TOO RISKY TO TURN ON TO CONTINUE - TRIP OUT
2210	TRAIN OUT TO 470
2215	AT D
2230	VIDEO COMM OFF
2243	CAMERA ON & OFF
2307	BLOW OFF ~~[illegible]~~
2326	DONE

12"		2340	CASE 12"
20"	1850'		
24"	1100'	2600	TD.
30"	220'		
48"	10'		

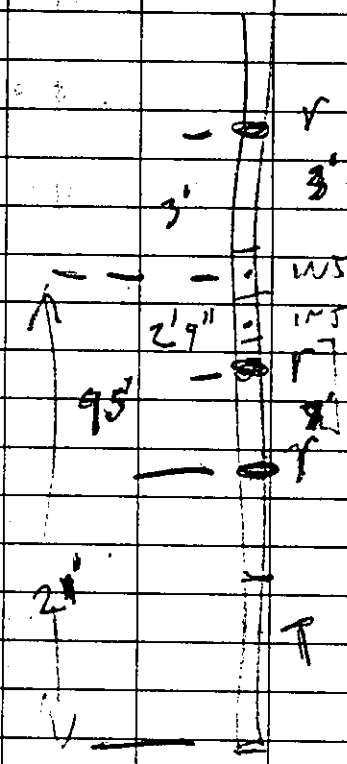

ρ ft/MIN = 29 GPM±

921400 7/24/92 NFMC

7:00 [illegible] - [illegible] - SCHL.
AT HI 5341 CURTIS FORD
CHADE GOWLET

7:15 ON SITE

SETTING UP TEST & CALIBR. ZO PST

RIGS - RUN BC T & V
- INT 1 HR BELOW CASING
- HOLD 1 hr & MONITOR
- REALIGN UPWARD

8:45 STILL CALIBRATING - PREP TO LOAD INTERVALS WITH ^{131}I RADIOACTIVE DYE

9:00 DOC HALLERFORD

9:11 DYE ADDED IN INTERVAL (w/) [illegible] (2357')

9:20 AGAIN POSITIONING MOVING TRUCK CLOSER TO WELL FOR BOOM RADIUS - NOT ENOUGH - [illegible] 5' TOO SHORT

9:43 CHANGING PLANS - TAKING INTERVALS OFF - RUN T only

THEN RUN T+INS only (2 TRIPS)

52 164 00 NAME 7/24

9.55 JOB - STARING UP - STARTING T LOG

10.15 WILL USE SIMS WATER FROM (NON POT) HOUSE BIB - 8 GPM AT 80 PSI FOR FLOW TEST ~ 115 PSI/MIN JOE THINKS THAT MAY SUFFICE AND WE CAN TRY OTHER METHODS IF NOT. WILL START FLOW ~ 15 MIN BEFORE INSERTING

LOGGING - JOINT 2311 } DYE FOR FLOW
B.O.L. 2342 } TEST

10.41 T.D. 2600 ft

10.50 JOB OFF SITE
UNLOADING CLEANING TOOLS - ADDING 27½ ft INSERTING REMOVING T LOG

INSTALLED - LOG 7½'s GOING IN TO B.O.L. FROM

11.40 RUNNING TOOL IN HOLE AND ADJUSTING DEPTH SCALE
RAN ~50' LOG AT B.O.L. TO COMPARE WITH PREVIOUS. ADJ. 6'

19.5

60.9

11.5' INSI TO BOTTOM

23' BOTTOM OF STRING TO COLLAR LOC.

11.5'

DEPTHS FROM SCHLUMBERGER LOG NOT LAMO VIDEO

921600 7/24/92 NFMU

1145 - DEPTH ADJUSTED - GOING TO TD

1150 AT TD STARTING LOG FROM 2603 TO 1100' BMP

1210 9 COPIES OF T LOG FROM MIKE WEBB

1222 AT 1100' GOING BACK DOWN

1227 AT 2410 COMING UP TO B.O.C.

BOL = 2342

~~EOT~~ = 2343

PUT BOTTOM AT 2354.5 (11.5' BOTTOM ESTIMATE)

1230 2354.5 ESTIMATE AT 2343

1235 1 mR/hr ESTIMATED

1 MIN TO START OF INCREASE IN COUNTS UPWARDS MIGRATION LOG (2' ABOVE BOTTOM OF CASING (140)

VERIFIED AT

DOWNHOLE INCR. ALSO (GRSC) 139 - 150

COULD MOVEMENT ~~BE~~ ABOUT OF DIFF T? ESTIMATE TOOL SAT OUT IN SUNLIGHT WHILE T LOG WAS RUN

NOTE: DO OVERLAY OF BG ON
% LOGS IF NOT DONE IN FIELD

STATIC
PLAN - FROM POSITION LOG UPWARD
100'
- LOG DOWNWARD 100' + BELOW
CASING
- REPEAT 10 min @ 1600

1212
2356

92-64,00 NFMU 7/24

1249 GR 500 GAPI
GRSC 228 GAPI

1253 STOP BACK ON SITE
VIEWED LOG - WANTS TO KNOW
THE VIEWING IN STATIC POSITION

1305 GRAPHED GRSCPH31

1313 GRPH440 GRSCPH0

1321 GRPH433 GRSC 130 GRTC 355

1335 STOP
LOG OUT OF POSITION TOO FAR

1339 TO 2219.5 FROM 2354.5
1340 RAN TOOL DOWN TO 2435'±
(NO LOG)

RUN LOG UP THROUGH AGAIN
TO FIND BOTTOM - SUP. BACKLOAD

1345 START UP FROM 2435'.

SET FOR 2' ABOVE EST. BOT = 2352.5

92-164.00 NFMU 7/24

1400 GAGG 188 START FLOWING WELL
1405 200

1415 TOP 7" AT 2325' (BOTTOM AT 2340.4)

GR AT 210
1420 4" AT 163

1425 FLOW GOOD WELL
ON
WHEN VALVE OPENED BUT
PUMP NOT ON - SLUG PASSED UP
CASING
PUMP ON - SLUG MADE BACK DOWN
EST 1500 GPM
PRESSURE 38 PSI
FOR 11.5 MIN

1446 TOOK TOOL TO 2450 FOR POST
PUMP OFF LOG
SLOW FLOW IN FROM MAIN CONT.
HOSE BIB

2450 TO 2240

NEXT TIME — BLOW 1hr ± TEST

92-164.00 NFMU 7/24

FLOW TEST W/ GAS (M.4 PHV)

SET INSERTOR AT 2336

(NEW B.O.C. AT 2341)

BOTTOM OF TOOL 2347.5

GR AT 2333
GRSG AT 2347.5

14:50 START B.G.

1501 REPORT 1 MCF AT 2336
CYCLIC LEVELS ON GASG
GR OFFSCALE SAME AS STATIC
COULD BE THAT WATER IS
STILL CIRCULATING IN CASING
AFTER PUMPING

1510? PROPANE COUNTERATE ON BOTH
PORTIONS

1518 STOP LOG OUT OF POSITION UP
1524 POOH (TO 2415')

TOP OF RAD AT 2328

1724 STILL CLEANING EQUIPMENT
WAYNE - DONE - TAM CLEANING
REINSTALLED

1730 WAYNE OFF SITE
FORMATING CHARTS

2023 STILL " "

2147 OFF SITE

92-16400 NFMU 7/24

1526 GO TO 2342

1533 FLUSH 10 MIN - DID NOT SET
SLUG

GR 95-100
GRIG 76
GRIV 76

1544 GO TO BOTTOM OF HOLE TO
RUN FINAL

1549 START LOG FROM TD TO 1100'

STAIN AT 2335

1617 AT 1100 - GO TO 2400 TO AT DMC

1630± JOE HABERFELD OFF SITE
PULLING TOOL FROM HOLE
TRY FLUSHED WELL FOR A FEW
MINUTES

1645 TAKING TOOLS ; UP DOWN

1052 MIKE GAVE ME 1 COPY OF
EXIT LOG (PAPER)

NFMU injection well 10/6/92
MIT 92-164.00

10:30 - On site; stuck in traffic on I-4; had to get off and take 39 to 62; then 62 to 301 then ~~back~~ on to I-75; lost time ~1½ hrs.

George and Gerald - and David Layne representatives

Packers will be here tomorrow morning

10:55 - mixing-up salt water

11:12 - injecting salt water down well

2:15 - checked w.l.; have killed head pressure to 31.7ft.

2:30 - w.l. still 31.7'

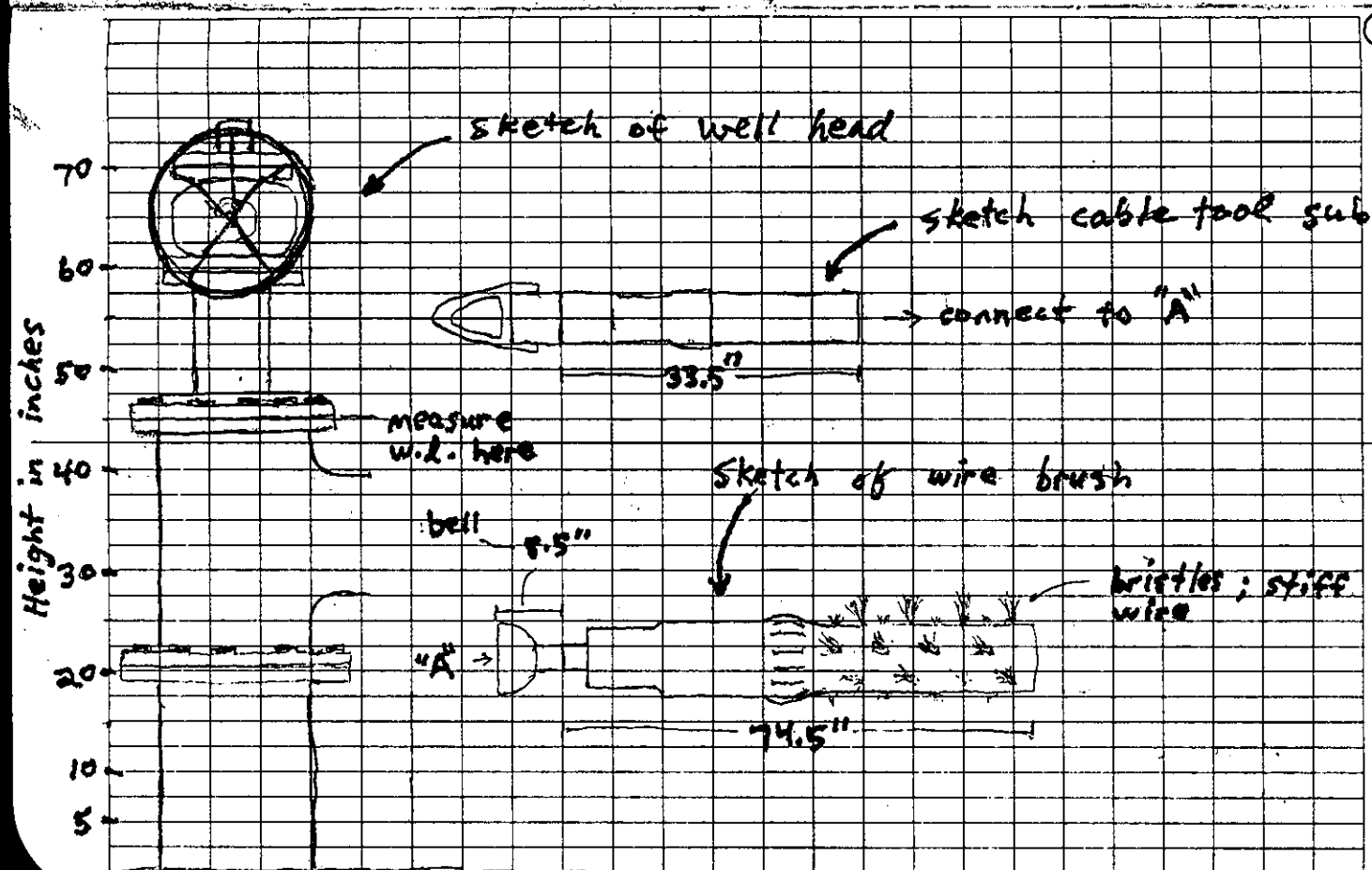

NFMC injection well
MIT
10/6/92

NFMU Injection well 10/6/92

(3) MIT

total length of brush, bail cable tool sub ~~[illegible]~~ and ~~[illegible]~~ ~~[illegible]~~ is ~~[illegible]~~ 9'8"

3:13 - trip in w/ brush; having trouble getting it to start sliding down well; will add a rod; the weight of the rod should send the brush on its way; rod length - 18'1"

~~[illegible]~~ total length of brush w/ attachments is ~~[illegible]~~ 22'10½"

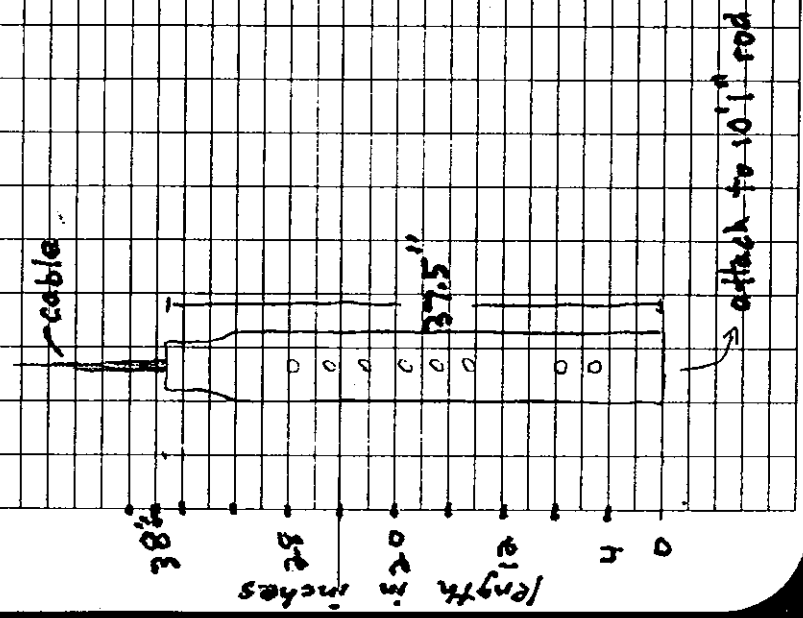

NFMU injection well 10/6/93
MIT

4:15 → wind. 32°6" [illegible]

~~[illegible]~~

George is stroking brush down well in a back and forth motion ~~[illegible]~~ ~~2 ft. up & down~~ w/ about a 3' stroke; after he strokes for a few minutes he lets it drop about a foot [illegible] continues this stroke [illegible] this is done until mark is hit; mark was hit at 97'4"; so 97' [illegible] is the mark

5:25 → w.l. fluctuating between 32.0 and 34.0 ft.; adding more salt to well [illegible]

5:20 → strip into 97'4" marked cable; began stroking

NFMU Injection Well 10/6/92
MIT

5:45 - reached third mark; have ~~194'~~ ~~in hole~~ 194'8" in hole

5:49 - trip out

5:50 - w.l. ~~395" (39'6")~~ 39'6"

5:52 - trip in; continued stroking

6:07 - reached 4th mark; have 297' in hole

6:08 - continue stroking

6:14 - reached fifth mark; have 389'4" in hole

6:15 - continue stroking

6:24 - reached 6th mark; 486'8" in hole

6:25 - continue stroking

6:32 - reached 7th mark; 584' in hole

6:35 - w.l. 40'2"

6:36 - continued stroking

* casing depth is 2,335'

6:45 - OFF SITE

7:05 - ON SITE

* At ~~1126'~~ 1168'; continuing on 13th mark ?

7:20 - reached ~~1275'~~ 1265'4"; 14th mark

will call it a night; it is getting hard to see; will continue tomorrow morning; trip out at 7:30

7:35 - w.l. 44'2"

7:46 - OFF SITE

NFMU Injection Well 10/7/92
MIT 92-164.00

7:30 - on site; George is running brush down well; ~~to~~ ~~from~~ Ralph Palmer (Layne) is on site

Will have to add ~1000' of pipe (or rods) to the brush; There is not enough cable to finish the job; total depth reached with the cable is 1265'4"

9:45 - removed brush off of attachments

10:05 - added 2'7" onto the sub; attaching rods

10:00 - Chuck Drake on site

12:38 - rods attached; added 11" attatchment ~~to~~ (joint) to top of rods; will be used to attach rods and hammer

Nfarm Injection Well
MIT
10/7/92

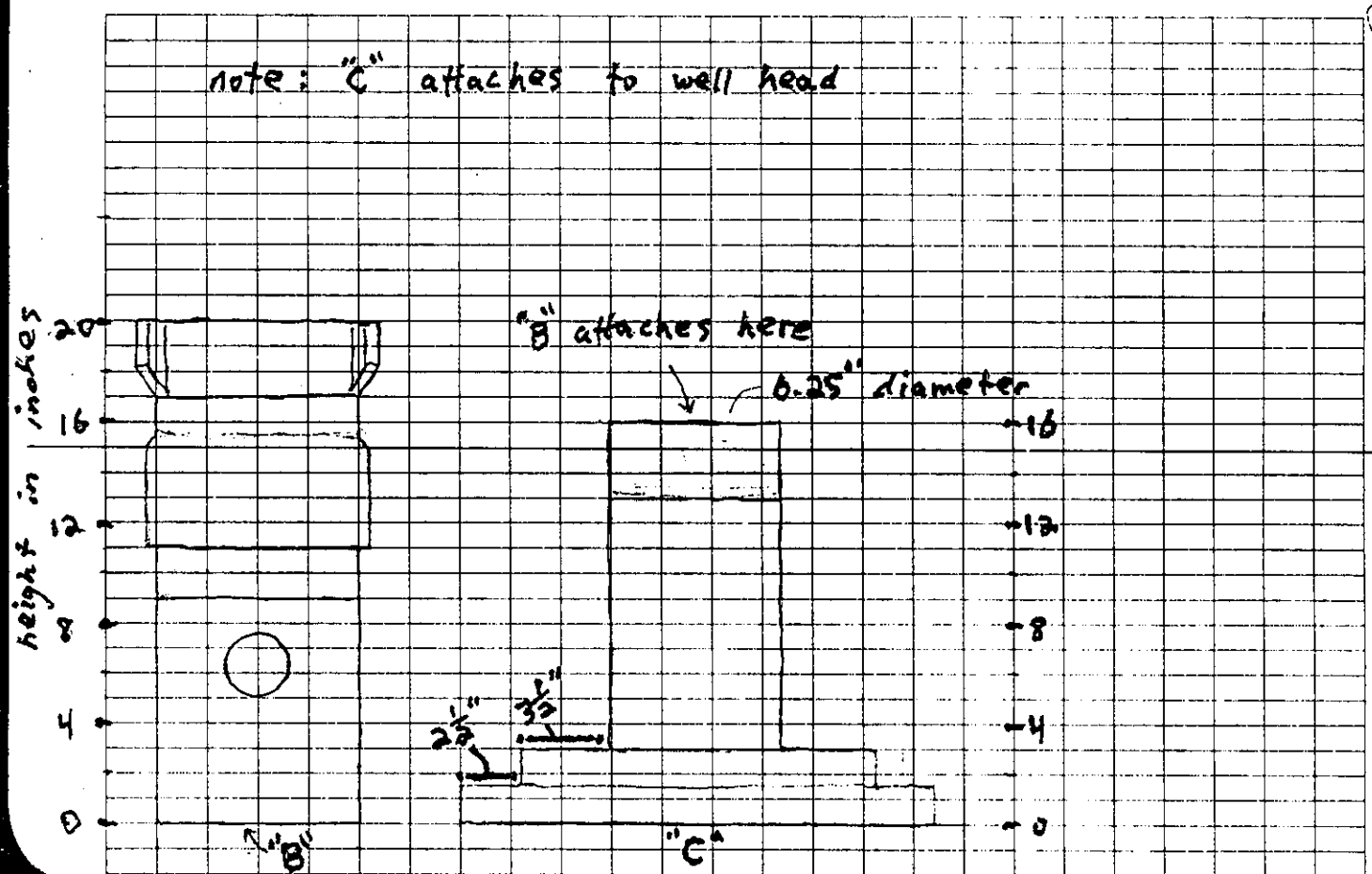

NFMU Injection Well 10/7/92
MIT

12:45 - trip in hammer and cable; have 1073'8" of rod in hole; lowered brush to

* first mark on cable - ~~at~~ 1171' in hole

* second mark - 1268'4"

* Third mark - 1365'8"

* Fourth mark - 1463'

* Fifth mark - 1560'4"

Note: depth is measured from the mark ~~which is made from~~ at the well head

- 6th mark - 1657'8"

- 7th mark - 1755'

~~* note - mark on cable~~

NRMU Injection Well 10/7/92
MIT

8th mark - 1852' 4"

will stop trip-in to let brake cool

1:00 - Chuck Drake and Bob Hahn off site; Bob arrived w/ Ralph

1:25 - Jigger w/ Baker on-site w/ packer; packer is [redacted] from Baker Service Tools

1:55 - continued trip-in; 9th mark reached - 1949' 8"

10th mark - 2047'

11th mark - 2144' 4"

12th mark - 2241' 8"

13th mark - 2339'

Nemu injection well 10/7/92

MIT

will not bring 13 mark all the way down to wellhead; will leave it ~ 9' in the air; will only take brush to 2330' - 5' ~~about~~ above bottom of casing

George stroked brush several times at the bottom of casing to ensure area packer will be set is clean

trip-up is very slow; engine will stop if pulling is continuous; have to stop pulling about every 10' or so to let the engine rest for a few seconds

3:05 - CWS on site

3:15 - test packer inside of a scrap piece of casing; pressured up to 180 psi; poured H_2O down casing; got no leaking

3:45 - chuck off site

NFMU Injection well 10/7/92
MIT

3:45 - shut down ; don't have enough power to get out of the hole ; trying to adjust the clutch

4:15 - continued trip-out

6:44 - chuck on site

7:04 - trip-out complete

7:30 - off-site w/ Chuck ; Layne has called in a night crew from Orlando - they should be here shortly ; Jigger off-site ; went back to his shop to get a plug for the bottom packer

9:30 - back on-site ; Layne night crew arrived about 7:45 ; they will set the packer tonight and test it so it will be ready for tomorrows pressure test (MIT)

NFMC Injection Well 10/7/92
MIT

10:00 - Jigger back on-site
Ralph also on-site

10:20 - inserted packer into well; Jigger finished filling packer w/ water
packer est. < 3.00 / 4.08 33

10:30	1st	TUBING JOINT	31.583	31' 7"
	2nd	"	31.75	31' 9"
	3rd	"	29.833	29' 10"
	4th	"	31.583	31' 7"
TOTAL	5th	"	31.583	31' 7"
	6th	"	31.583	31' 7"
	7th	"	31.666	31' 8"
	8th	"	31.583	31' 7"
	9th	"	31.666	31' 8"
	10th	"	31.666	31' 8"
	11th	"	31.583	31' 7"
	12th	"	32.9166	32' 11"
	13th	"	31.583	31' 7"
	14th	"	31.666	31' 8"
	15th	"	30.583	30' 7"
	16th	"	31.666	31' 8"
	17th	"	29.4166	29' 5"

540.9935

NPMU Injection Week 10/7/92
MIT

18th	Tubing Joint	31.666	31'8"
19th	"	30.5833	30'7"
20th	"	31.666	31'8"
21st	"	31.583	31'7"
22nd	"	31.666	31'8"
23rd	"	31.665	31'8"
24th	"	31.583	31'7"
25th	"	31.50	31'6"
26th	"	31.666	31'8"
27th	"	31.666	31'8"
28th	"	31.583	31'7"
29th	"	31.333	31'4"
30th	"	31.583	31'7"
31st	"	31.583	31'7"
32nd	"	31.583	31'7"
33rd	"	31.666	31'8"
34th	"	31.666	31'8"
35th	"	31.583	31'7"
36th	"	31.666	31'8"
37th	"	31.583	31'7"
38th	"	31.666	31'8"
39th	"	32.9166	32'11"
40th	"	31.583	31'7"
41st	"	31.666	31'8"

758.8939

NFMU injection well 10/7/92

MIT

42nd	Tubing Joint	[illegible]	31' 8"
43rd	"	[illegible]	31' 7"
44th	"	31.666	31' 8"
45th	"	31.583	31' 7"
46th	"	31.75	31' 9"
47th	"	31.583	31' 7"
48th	"	[illegible]	31' 8"
49th	"	30.666	30' 8"
50th	"	[illegible]	31' —
51st	"	30.75	30' 9"
52nd	"	30.75	30' 9"
53rd	"	[illegible]	30' 9"
54th	"	30.916	30' 11"
55th	"	30.583	30' 7"
56th	"	29.75	29' 9"
57th	"	30.833	30' 10"
58th	"	30.583	30' 7"
59th	"	30.250	30' 3"
60th	"	30.666	30' 8"
61st	"	30.833	30' 10"
62nd	"	30.666	30' 8"
63rd	"	30.75	30' 9"
64th	"	30.833	30' 10"
65th	"	31.25	31' 3"
		745.15	

(24)

NFMU injection well 10/7/92
MIT

66th	Tubing down	30.58	30' 7"
67th	"	30.50	30' 6"
68th	"	30.666	30' 8"
69th	"	30.666	30' 8"
70th	"	30.833	30' 10"
71st	"	30.75	30' 9"
72nd	"	30.833	30' 10"
73rd	"	30.916	30' 11"
74th	"	30.75	30' 9"
75th	"	31.166	31' 2"
76th	"	30.75	30' 9"
77th	"	30.833	30' 10"

2414.3 total ← 36%2466

note: filled tubing w/ H_2O every 10th tube

Fitting between 48 and 49 measures 1'10"; total length is 2314'4" w/out packer; plus 11' more *tubing making it 2325'4" w/out packer

*note: last tube joint will only be lowered down well 11 ft.

(5)

	30.833	last four tubes
	30.75	
	31.166	
	+30.75	
	123.499	
	2414.3	total
	-7.0833	packer est.
	2407.21	
	-123.499	remove
	2283.71	
	+12.25	amount of last rod to go in hole
	2295.96	
	5.05	packer and subs
	2.63	
	.70	
	+.85	
	2305.19	
	+1.00	extension
	2306.19	total assembled length

(46)

(16) Sketch of Packer

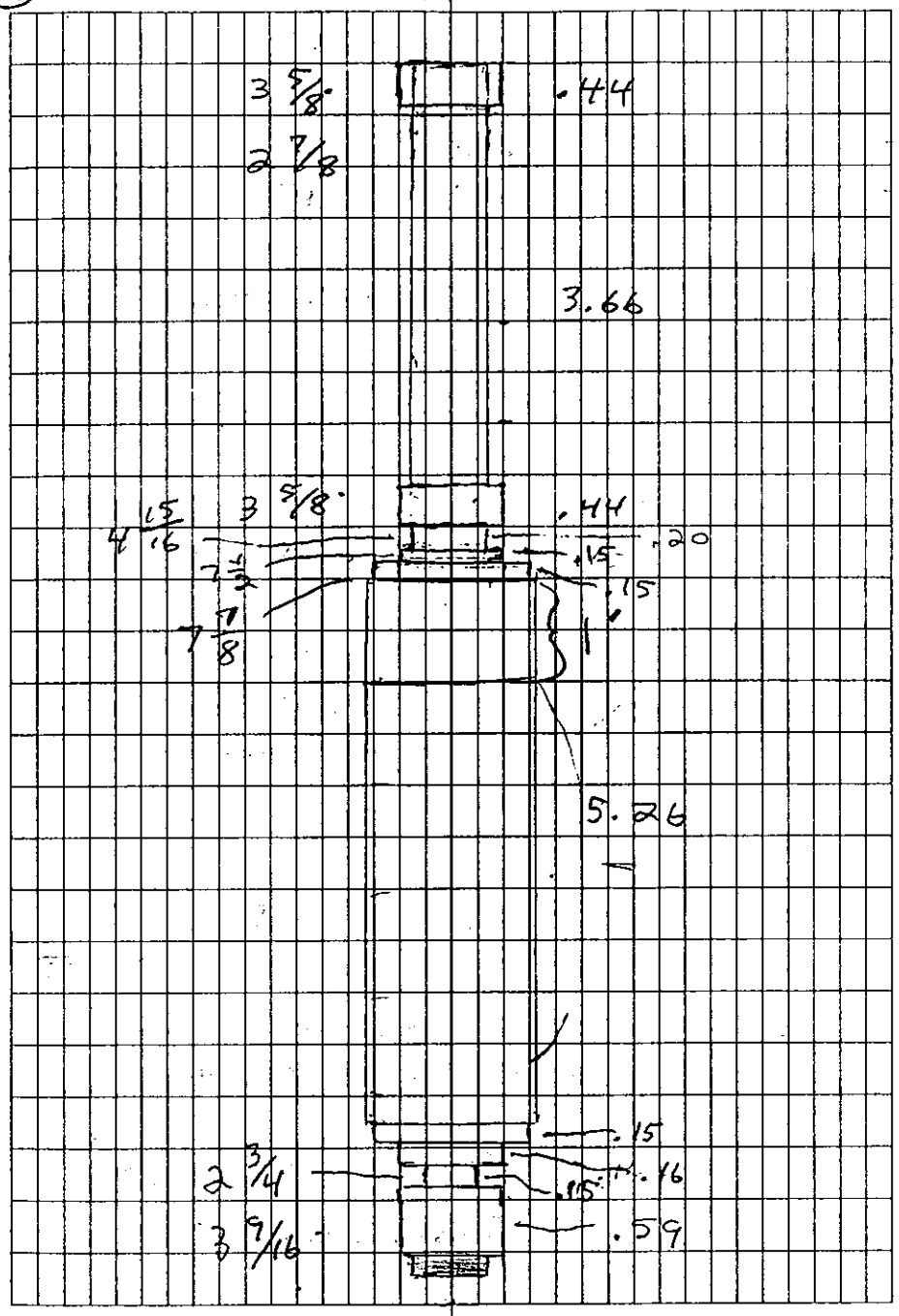

Total length - 12.15'

NPMU Injection well 10/8/92
MIT

SHIFT CHANGE 4 a.m.

GERALD, GEORGE, DAVID TAKE OVER FOR BILL etc.

6 JOINTS REMAIN TO BE PUT IN.

STRIPPER HEAD ASSEMBLED @ 5:20 a.m.

PACKER SET AT 2325' BELOW TOP OF 12" TEE

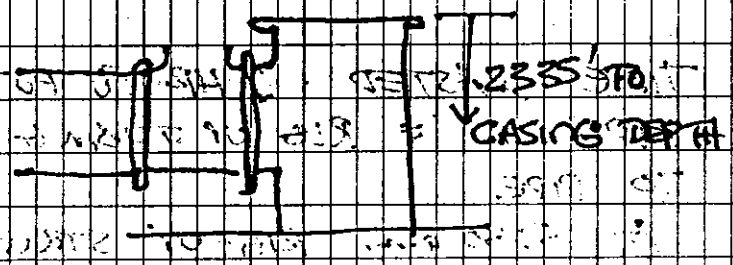

9:35 Bill W. back on site.

STARTED FILLING ANNULUS W/ WATER AT ~7:15 a.m.

NEED 40 FT. OF WATER IN 12" CASING THERE ARE 5.87 gal/ft

NEED 235 GAL.
@ 6 GPM ~39 min NEEDED.

AFTER 1 HR STILL FILLING.
GEORGE STARTED CHECKING
DRILL STEM LENGTH CALCS.
FOUND HE MADE A 100 FT.
ERROR.
ERROR FOUND AT 9:30.
MUST PULL 4 LENGTHS
AND PUT 31' LARGER DIAMETER
IN TO 15-20'

TIME WASTED 1 HR TO PUT
PIPE IN & RIG UP TUBING
TO PIPE.
AT 5:30 a.m. RIG-UP STRIPPER
HEAD
AT 6:30 PUT LAST LENGTH
IN AND MAKE FINAL TUBING
CONNECTIONS.
AT 7:30 START FILLING
ANNULUS.

AT 10:00 TRIP OUT
4 LENGTHS

WASTED ALL BUT 1 HR
STRIPPER HEAD SET-UP.

ADD. NOTES.
FROM 10-7 BRUSHING WELL
FROM 1200-2335' FT.

The totals on page 15 are incorrect. As Chuck stated on page 17b 100 Ft. of tubing was incorrectly ~~[illegible]~~ sent down the well. Four lengths had to be removed. Total depth now w/ packer will be 2306.19' - the packer will be set here. The first joint is at 2303 ft.

note: 2407.21' was mistakingly set in well ~ this was ~~[illegible]~~ calculated by Chuck after the packer was inflatted but the well wasn't holding any water; Chuck determined that the packer must be

below the casing ~~[illegible]~~ and not failing because it had passed inspection yesterday (page 10); this error was due to a a mistake in Georges calculations; 4 tubes were then removed

The following are Chuck's calculations (mine are on pg. 14b):
w/jw

2407.21' length in well (error)
−123.499' length to be removed
2283.71 rod total length plus
+ 12.25' amount of last rod in hole
2295.96'
5.05
2.63
.70
+ .85
} — Packer & subs
2305.19'
+ 1.00 extension

2306.19' Total assembled length
2303' depth of 1st joint in casing

NFMU Injection Well 10/8/92
92-164.00 MIT

~~test~~

attempted trial test; injected H_2O down ~~[illegible]~~ ~~[illegible]~~ hole; no pressure reading; ~~[illegible]~~ packer not tight enough (~1500 psi); will try again once more nitrogen ~~[illegible]~~ gets here to fill the packer

* inject H_2O down hole to build up the pressure

3:14 - attempting second test; holding at ~~120~~ 130 psi; packer inflatted to between 1400 and 1450 psi; Jigger thinks he may have a leak so he's keeping packer inflatted best as possible

[illegible]ding pressure

3:19 - holding at ~~[illegible]~~ 130 psi

3:24 - 127.5 psi
3:26 - 125 psi
3:28 - 120 psi
3:30 - 115 psi

NFMU Injection Well 10/8/92
MIT

3:32 - 108 psi

will pressure it back up ~~to 130 psi~~ ~~133.5~~

3:33 - 133.5 psi
3:36 - 128.5 psi
3:39 - 120.0 psi
3:42 - 108.5 psi
3:45 - 97.5 psi
3:48 - 87.5 psi
3:54 - 68.0 psi

Jigger and Gerald left around 3:45 to get more nitrogen; I will take George up to Taylor rental to get a ~~[illegible]~~ welder so he can work on the elevators

5:30 - spoke w/ Vince Mele of DER; he will be on site ~~around~~ tonight to inspect the test

NEMU injection well 10/8/92
MIT

Chuck Drake off site around 4:30; he instructed me to ~~[illegible]~~ stay on job tonight and run test tomorrow morning if ~~a~~ DER ~~[illegible]~~ doesn't show tonight but tomorrow morning; since Vince Mele is on his way for inspection we attempt to run the MIT; Jiggs is going to ~~[illegible]~~ keep the pressure up in the packer by keeping nitrogen pumped in it to maintain a pressure of 1400 - 1450 psi; if test fails well most likely have to trip out tonight and try again next week (Tues.); WFMU needs to put the well back on line for the weekend - must be on line by tomorrow late afternoon; it will take Layne time to trip-out and ~~[illegible]~~ reattach well apparatus; that's why we will trip out tonight if

NFMU Injection Well 10/8/92
MIT

The test should fail

6:00 - Vince Mele on site; I told him the situation at hand

note: ~~trde~~ tried filling well w/ water but pump was turned off; had to change ~~hoses~~ pumps; will fill well and give that a try; Jiggas relaxed the packer so we need to fill well back up w/ H_2O

6:40 - Chuck called, I told him what's going on

6:45 - start test

Time	psi
start	130

NFMU Injection week 10/8/92
MIT

psi guage certification : 10/2/92
Blue Ribbon I.C.C.
Winter Park FL
407 677-8899
0-160 psi ; ~~[illegible]~~
increments of one

Time	psi
[illegible]	[illegible]
[illegible]	[illegible]
[illegible]	[illegible]
[illegible]	[illegible]
[illegible]	[illegible]
[illegible]	[illegible]
[illegible]	128
[illegible]	129
[illegible]	128
[illegible]	127
20 min	126

[illegible] alms ; will start
psi ; last tank of
about depleted ; will
it will last
can only
lose 5% or
6.4 pounds
per square
inch (psi)

pressure dropped to 21 psi at
24 min 30 sec ; Test failed
at 7:24 p.m.

NFRAME Injection well 10/8/92
MIT

have air in line when blowing off; ~~to get to the ps~~; Vince wants Hal coming out; I told him Chuck will be getting in touch w/ him on Monday vs Tuesday to discuss setting up another inspection; I will leave site and head back to Orlando tonight and reorganize w/ [redacted] on Monday

[redacted] SITE

[redacted] believes the [redacted] the packer [redacted] thinks this [redacted] being [redacted] up from below casing depth

NPMW Injection well 10/12/92
MIT

Video Log

2303' - 12" casing joint

2335' - End of 12" casing

* 0 ft. starts at well head

Chuck wants to have packer set around 2325' (where middle of packer will set); the packer must be below the bottom of the first casing joint at 2303'

NFMU Injection Well 10/13/92
MIT

Onsite - Jigger and Ralph; also the Layne crew; crew arrived last night - killed the well this morning

will set the packer at 2312'; Jigger can go back to his shop and get another sub to attach to take it deeper; I called Chuck to ask him about this but I couldn't reach him; until I hear from him I will hold jigger off on getting the other sub

11:45 - tried calling Chuck again; could not reach him

& used 64 80 lbs bags and 13 50 lbs bags of salt to kill the well to ~25 feet

NFMU MIT injection well 10/13/92

Rod measurements:

1st	Tubing Joint		31.70
2	"		31.85
3	"		31.82
4	"		31.78
5	"		31.75
6	"		31.63
7	"		31.76
8	"		31.80
9	"		31.75
10	"		31.40
11	"		31.70
12	"		31.78
13	"		31.62
14	"		31.65
15	"		31.68
16	"		31.62
17	"		31.68
18	"		31.63
19	"		31.63
20	"	317.13	32.94
21	"		31.75
22	"		31.77

698.67

NPRMU MIT injection well 10/13/90

23rd	Tubing Joint	31.84
24	"	31.68
25	"	31.85
26	"	31.74
27	"	31.59
28	"	31.76
29	"	29.87
30	"	31.64
31	"	31.64
32	"	31.66
33	"	31.69
34	"	31.64
35	"	31.71
36	"	31.62
37	"	32.94
38	"	31.63
39	"	31.64
40	"	31.63
41	"	31.58
42	"	31.68
43	"	29.45
44	"	31.63
45	"	31.68
46	"	31.57
		757.33

Nparu injection well 10/13/92
MIT

47	Tubing Joint	31.64
48	"	30.75
49	"	31.02
50	"	31.79
51	"	30.69
52	"	30.94
53	"	30.62
54	"	30.76
55	"	29.75
56	" 308.79	30.84
57	"	30.57
58	"	30.28
59	"	30.7
60	"	30.78
61	"	30.64
62	"	30.75
63	"	30.91
64	"	31.18
65	"	31.65
66	"	30.51
67	"	30.65
68	"	30.90
69	"	30.88
Sub between 47 and 48	102.2	1.80
		710.99

NPAM Injection well 10/13/92
MIT

2370th	Tubing Joint	30.76
2371	"	30.87
2372	"	92.51 30.88
		2259.56

Packer length	10.94
Sub	.63
Top Rod	31.88
Pump joint	4.0
pup joint	6.0
	53.45
	2313.01

Total length : 2313 ft.

* Jiggers measurements

2259.27 joint length
+ 10.94 packer
2270.21
.63 sub
+ 31.88 last joint
2302.72
4.10 pump joint
+ 5.59 pup joint
2312.41

2312.41
− 2.65 head sticking up
2309.76
− 1.50
2308.26
+ 4.10 sub
2312.36

NFMLC Injection Weee 10/13/92

MIT

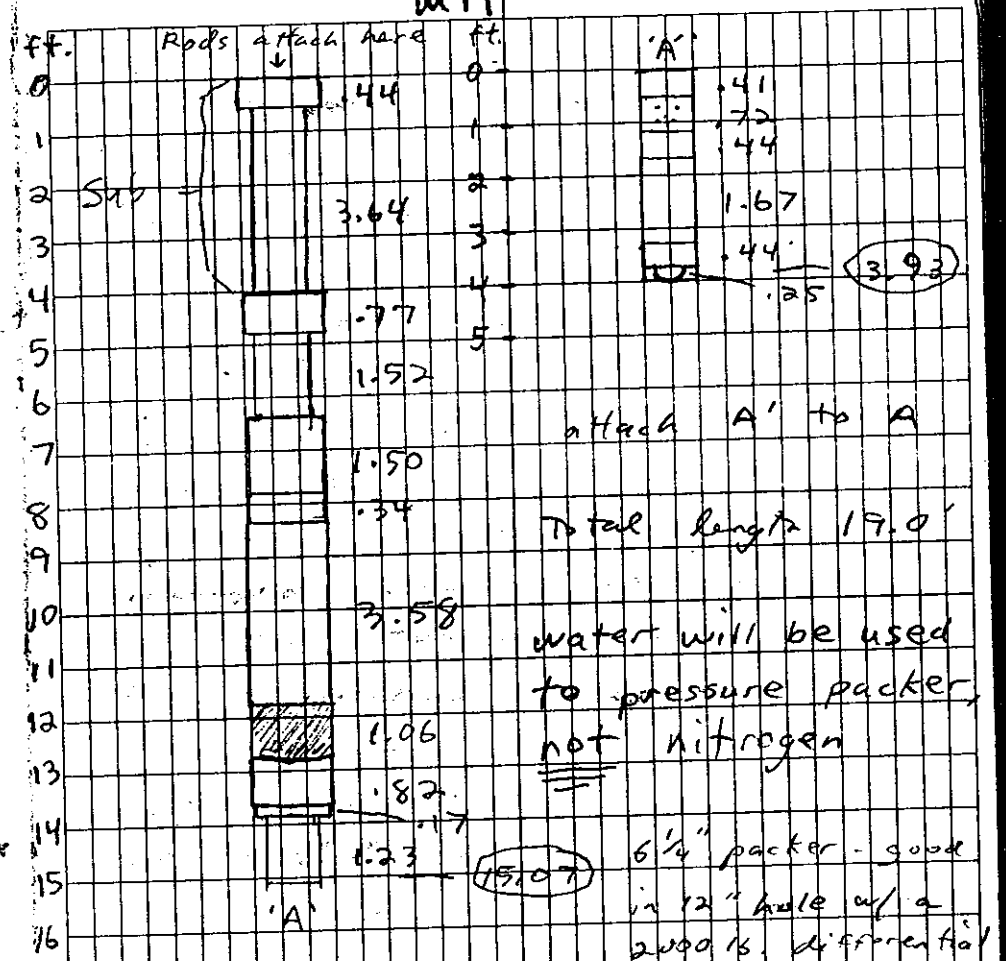

attach A' to A

Total length 19.0'

water will be used to pressure packer, not nitrogen

6 1/4" packer - good in 12" hole w/ a 2000 lb. differential

packer was tested w/ air and passed inspection by Jigger at the tie shop; problem w/ other packer (the one used last week) was that it had a tiny hole in its bladder as seen by Jigger after inspecting it.

NFMU Injection Well 10/13/92
MIT

Packer ~~[illegible]~~ will be set at 2312', it is directly connected to tubing joint - no other tubing is being used; after each tube is connected it is filled w/ H_2O, once the final tube is attached and ~~filled~~ the well head sealed, water will be pumped down the inside of the tubing - this will keep ~~pressure~~ pressure on the packer; once the packer has been pressurized it will be sealed off and the casing can then be ~~pressurized~~ ~~to~~ filled w/ water, sealed, and ~~off~~ pressurized to 129 psi

3:10 - trip-in complete

hose used to fill tubing joint and ~~the~~ well has a flow of 5 gal/30 sec or 1 gal ~~every~~ every 6 sec

NFMU Injection Well 10/15/92
MIT

3:57 - started filling packer

4:03 - packer filled to ~ 400 psi

4:05 - started filling well; ~ 20 in.c

Psi gauge calibration:
Date: 10/2/92
Blue Ribbon i.c.c.
Winter Park Fl
407 - 677 - 8899
increments of one

4:10 - packer lost some pressure; re-pressurized it to ~ 400

4:24 - well filled

4:25 - packer still losing pressure - almost 60 lbs.

4:29 - pressurizing well casing to 129 psi

NFMU injection well 10/13/92
MIT

Time	psi
0 sec.	129 psi
5 min	129 psi
10 min	129 psi
15 min	128.5 psi
20 min	128.5 psi
25 min	128.5 psi
30 min	128.4 psi
35 min	128.3 psi
40 min	128.3 psi
45 min	128.3 psi
50 min	128.3 psi
55 min	128.3 psi
60 min	128.2 psi

note: each measurement from 15 min - 60 min may have reading error of .1± psi

percent loss of 0.006 %
can lose maximum of ±5 % (6.45 lbs)

NFMU Injection Well 10/13/92

MIT

5:30 - test complete; I will call Chuck in the A.M. to tell him the news; I will also call DER to find out what time they can get out tomorrow to run the test; will leave 80 psi of pressure on the well tonight

5:45 - OFF SITE

NFMU Injection
MIT

10/14/92

on site - Vigger, Ralph Palmer, and crew
7:30 - pressured well to ~~up~~ 129 psi; will test well for an hour; packer filled to 400 psi but dropped to ~ 200 psi
* note: the 80 psi left on the well last night did not hold - the packer relaxed

	Time	psi
7:43a	0	130 psi
	5 min	130 psi
	10 min	130 psi
	15 min	130 psi
	20 min	130 psi
	25 min	130 psi
	30 min	130 psi
	35 min	130 psi
	40 min	130 psi
	45 min	130 psi
	50 min	130 psi
	55 min	130 psi
	60 min	130 psi

Test complete at 8:43 a.m.

NFMU Injection Well 10/14/92
MIT

8:45 - I spoke w/ Vince Mele of FDER Ft. Myers; he is sending Richard Orth out to inspect the MIT; he will be here around 10:30 a.m.

9:05 - pressure still holding at 130 psi

11:15 - pressure still holding at 130 psi

11:45 - Richard Orth from DER on site

11:45 - Test starts; bleed pressure off to 129 psi

Time		psi
11:45	0	129 psi
	5 min	129 psi
	10 min	129 psi

NFMU injection Well 10/14/92

MIT

Time	psi
15 min	128.5 psi
20 min	128.3 psi
25 min	128.0 psi
30 min	127.8 psi
35 min	127.5 psi
40 min	127.5 psi
45 min	127.5 psi
46 min	packer relaxes; will start test over

12:34 - re filling packer; 400 psi

12:36 - pressurized well; Ralph Palmer will bleed it off to ~130 psi

12:44 - re started test at 130 psi

NFMU Injection Well 10/14/92
MIT

	Time	psi
12:44	0	130.2 psi
	5 min	130.6 psi
	7 min	131.0 psi
	10 min	131.2 psi
	15 min	131.5 psi
	20 min	131.7 psi
	25 min	131.8 psi
	30 min	131.8 psi
	35 min	131.9 psi
	40 min	131.9 psi
	45 min	131.9 psi
	50 min	132.0 psi
	55 min	132.1 psi
1:44	60 min	132.2 psi

bled pressure off - all water

1:46 - Test passed; 2 lbs was gained in the test, percent increase of 1.55 %

1:47 - Richard Orta off site

NFMU Injection Well 10/14/92
MIT

Layne crew will trip-out packer and rods then get well put back together where it can then go back on line

2:00 - OFF site

* Note: possible reason for gaining pressure during MIT is the ~~heat from~~ sun heating up well head thus increasing the pressure inside

APPENDIX D

APPENDIX D
NFMU INJECTION WELL PERMIT

RECEIVED
JUL 13 1992

STATE OF FLORIDA
DEPARTMENT OF ENVIRONMENTAL REGULATION

NOTICE OF PERMIT

CERTIFIED MAIL NO. P 021 151 144
RETURN RECEIPT REQUESTED

In the matter of an
Application for Permit
by:

Ray Dixon, Jr., V.P.
North Fort Myers Utility, Inc.
P. O. Box 2547
Fort Myers, FL 33902

DER File No. 5236P00249
Lee County - UIC
North Fort Myers Utility
Class I Injection Well

Enclosed is Permit Number UO36-191266 to operate a Class I injection well issued pursuant to Section 403.087, Florida Statutes.

Any party to this Order (permit) has the right to seek judicial review of the permit pursuant to Section 120.68, Florida Statutes, by the filing of a Notice of Appeal pursuant to Rule 9.110, Florida Rules of Appellate Procedure, with the Clerk of the Department in the Office of General Counsel, 2600 Blair Stone Road, Tallahassee, Florida 32399-2400; and by filing a copy of the Notice of Appeal accompanied by the applicable filing fees with the appropriate District Court of Appeal. The Notice of Appeal must be filed within 30 days from the date this Notice is filed with the Clerk of the Department.

Executed in Fort Myers, Florida.

STATE OF FLORIDA DEPARTMENT
OF ENVIRONMENTAL REGULATION

Philip R. Edwards
Director of
District Management
South District Office
2295 Victoria Avenue
Fort Myers, Florida 33901
(813) 332-6975

CERTIFICATE OF SERVICE

The undersigned duly designated deputy agency clerk hereby certifies that this NOTICE OF PERMIT and all copies were mailed before the close of business on April 20, 1992 to the listed persons.

Clerk Stamp
FILING AND ACKNOWLEDGMENT

FILED, on this date, pursuant to §120.52(11), Florida Statutes, with the designated Department Clerk, receipt of which is hereby acknowledged.

Karen L. Mialy 4-20-92
(Clerk) (Date)

PRE/VNM/dd

Enclosures

Copies furnished to:
TAC
W. Pitt, P.E.

Florida Department of Environmental Regulation

South District • 2295 Victoria Avenue, Suite 364 • Fort Myers, Florida 33901

Lawton Chiles, Governor

Carol M. Browner, Secretary

PERMITTEE:
Ray Dixon, Jr., V.P.
North Fort Myers Utility, Inc.
P.O. Box 2547
Fort Myers, Florida 33902

I.D.No: 5236P00249
Permit/Cert.No.: UO36-191266
Date of Issue: April 17, 1992
Expiration Date: April 17, 1997
County: Lee
Latitude: 26° 43′ 58" N
Longitude: 81° 52′ 54" W
Section/Town/Range: 14/43S/24E
Project: North Fort Myers Utility
Class I Injection Well

This permit is issued under the provisions of Chapter 403, Florida Statutes (F.S.), and Florida Administrative Code (F.A.C.) Rules 17-3, 17-4 and 17-28. The above named permittee is hereby authorized to perform the work or operate the facility shown on the application and approved drawing(s), plans, and other documents, attached hereto or on file with the Department and made a part hereof and specifically described as follows:

Operate a Class I injection well and monitoring system utilized as a back up for disposal of non-hazardous, secondarily treated reclaimed water following filtration and disinfection from the existing 2.0 mgd wastewater treatment facility. The maximum allowable injection rate and pressure are 2810 gallons per minute and 86 pounds per square inch, respectively. The injection well injects effluent through a 12 inch nominal diameter steel casing, set at 2340 feet below land surface with an open hole interval to 2600 feet below surface. The dual zone monitor well samples the intervals from 1318 to 1422 feet below land surface and from 1930 to 2004 feet below land surface.

This project was constructed according to permit UC36-137425 and further described on the application to operate a Class I injection well system received January 11, 1991 with supporting documents and additional information last received November 22, 1991.

Location: North Fort Myers Utility wastewater treatment plant, Tucker Lane, North Fort Myers, Florida.

Subject to: General Conditions 1-16 and Specific Conditions 1-5.

PERMITTEE:
Ray Dixon, Jr., V.P.
North Fort Myers Utility, Inc.

I.D.No: 5236P00249
Permit/Cert.No.: U036-191266
Date of Issue: April 17, 1992
Expiration Date: April 17, 1997

GENERAL CONDITIONS:

1. The terms, conditions, requirements, limitations, and restrictions set forth in this permit are "permit conditions" and are binding and enforceable pursuant to Sections 403.141, 403.727, or 403.859 through 403.861, F.S. The permittee is placed on notice that the Department will review this permit periodically and may initiate enforcement action for any violation of these conditions.

2. This permit is valid only for the specific processes and operations applied for and indicated in the approved drawings or exhibits. Any unauthorized deviation from the approved drawings, exhibits, specifications, or conditions of this permit may constitute grounds for revocation and enforcement action by the Department.

3. As provided in Subsections 403.087(6) and 403.722(5) F.S., the issuance of this permit does not convey any vested rights or any exclusive privileges. Neither does it authorize any injury to public or private property or any invasion of personal rights, nor any infringement of federal, state or local laws or regulations. This permit is not a waiver of or approval of any other Department permit that may be required for other aspects of the total project which are not addressed in the permit.

4. This permit conveys no title to land or water, does not constitute State recognition or acknowledgement of title, and does not constitute authority for the use of submerged lands unless herein provided and the necessary title or leasehold interests have been obtained from the State. Only the Trustees of the Internal Improvement Trust Fund may express State opinion as to title.

5. This permit does not relieve the permittee from liability for harm or injury to human health or welfare, animal, or plant life, or property caused by the construction or operation of this permitted source, or from penalties therefore; nor does it allow the permittee to cause pollution in contravention of Florida Statutes and Department rules, unless specifically authorized by any order from the Department.

6. The permittee shall properly operate and maintain the facility and systems of treatment and control (and related appurtenances) that are installed and used by the permittee to achieve compliance with the conditions of this permit, as required by Department rules. This provision includes the operation of backup or auxiliary facilities or similar systems when necessary to achieve compliance with the conditions of the permit and when required by Department rules.

GENERAL CONDITIONS:

7. The permittee, by accepting this permit, specifically agrees to allow authorized Department personnel, upon presentation of credential or other documents as may be required by law, and at reasonable times, access to the premises where the permitted activity is located or conducted to:

a. Have access to and copy any records that must be kept under the conditions of the permit;
b. Inspect the facility, equipment, practices, or operations regulated or required under this permit; and
c. Sample or monitor any substances or parameters at any location reasonably necessary to assure compliance with this permit or Department rules.

Reasonable time may depend on the nature of the concern being investigated.

8. If, for any reason, the permittee does not comply with or will be unable to comply with any condition or limitation specified in this permit, the permittee shall immediately provide the Department with the following information:

a. A description of and cause of non-compliance; and
b. The period of non-compliance, including dates and times; or, if not corrected, the anticipated time the non-compliance is expected to continue, and steps being taken to reduce, eliminate, and prevent recurrence of the non-compliance. The permittee shall be responsible for any and all damages which may result and may be subject to enforcement action by the Department for penalties or revocation of this permit.

9. In accepting this permit, the permittee understands and agrees that all records, notes, monitoring data and other information relating to the construction or operation of this permitted source, which are submitted to the Department, may be used by the Department as evidence in any enforcement case involving the permitted source arising under the Florida Statutes or Department rules, except where such use is prescribed by Section 403.111 and 403.73, F.S. Such evidence shall only be used to the extent it is consistent with the Florida Rules of Civil Procedure and appropriate evidentiary rules.

10. The permittee agrees to comply with changes in Department rules and Florida Statutes after a reasonable time for compliance, provided however, the permittee does not waive any other rights granted by Florida Statutes or Department rules. A reasonable time for compliance with a new or amended surface water quality standard, other than those standards addressed in Rule 17-3.051, shall

GENERAL CONDITIONS:

include a reasonable time to obtain or be denied a mixing zone for the new or amended standard.

11. This permit is transferable only upon Department approval in accordance with F.A.C. Rules 17-4.120 and 17-30.300, F.A.C. as applicable. The permittee shall be liable for any non-compliance of the permitted activity until the transfer is approved by the Department.

12. This permit or a copy thereof shall be kept at the work site of the permitted activity.

13. This permit also constitutes:

a. Determination of Best Available Control Technology (BACT)
b. Determination of Prevention of Significant Deterioration (PSD)
c. Certification of compliance with State Water Quality Standards (Section 401, PL 92-500)
d. Compliance with New Source Performance Standards

14. The permittee shall comply with the following:

a. Upon request, the permittee shall furnish all records and plans required under Department rules. During enforcement actions, the retention period for all records will be extended automatically, unless otherwise stipulated by the Department.
b. The permittee shall hold at the facility or other location designated by this permit records of all monitoring information (including all calibration and maintenance records and all original strip chart recordings for continuous monitoring instrumentation), required by the permit, copies of all reports required by this permit, and records of all data used to complete the application for this permit. These materials shall be retained at least three years from the date of the sample, measurement, report or application unless otherwise specified by Department rule.
c. Records of monitoring information shall include:
    1. the date, exact place, and time of sampling or measurements;
    2. the person responsible for performing the sampling or measurements;
    3. the dates analyses were performed;
    4. the person responsible for performing the analyses;
    5. the analytical techniques or methods used;
    6. the results of such analyses.

GENERAL CONDITIONS:

15. When requested by the Department, the permittee shall within a reasonable time furnish any information required by law which is needed to determine compliance with the permit. If the permittee becomes aware the relevant facts were not submitted or were incorrect in the permit application or in any report to the Department, such facts or information shall be submitted or corrected promptly.

16. In the case of an underground injection control permit, the following permit conditions also shall apply:

(a) All reports or information required by the Department shall be certified as being true, accurate and complete.

(b) Reports of compliance or noncompliance with, or any progress reports on, requirements contained in any compliance schedule of this permit shall be submitted no later than 14 days following each schedule date.

(c) Notification of any noncompliance which may endanger health or the environment shall be reported verbally to the Department within 24 hours and again within 72 hours, and a final written report provided within two seeks.

1. The verbal reports shall contain any monitoring or other information which indicate that any contaminant may endanger an underground source of drinking water and any noncompliance with a permit condition or malfunction of the injection system which may cause fluid migration into or between underground sources of drinking water.

2. The written submission shall contain a description of an a discussion of the cause of the noncompliance and, if it has not been corrected, the anticipated time the noncompliance is expected to continue, the steps being taken to reduce, eliminate, and prevent recurrence of the noncompliance and all information required by Rule 17-28.230(4)(b), F.A.C.

(d) The Department shall be notified at least 180 days before conversion or abandonment of an injection well, unless abandonment within a lesser period of time is necessary to protect waters of the State.

PERMITTEE:
Ray Dixon, Jr., V.P.
North Fort Myers Utility, Inc.

I.D.No: 5236P00249
Permit/Cert.No.: UO36-191266
Date of Issue: April 17, 1992
Expiration Date: April 17, 1997

SPECIFIC CONDITIONS:

1. OPERATING REQUIREMENTS

a. Injection of fluids other than those permitted into the disposal well(s) will constitute a violation of this permit and shall constitute cause for permit revocation and possible enforcement action for water quality violations.

b. In the event an emergency requires bypassing the injection well, the permittee shall notify the local office of the Department as soon as possible and no later than the first working day following the event. A written detailed report shall be submitted to the Department within seven (7) days following the event. The report shall provide the detail of events causing the emergency and remedial action to prevent any further emergency discharges. Should repetitive diversions to the emergency overflow develop because of plant operating conditions rather than true emergencies, the permittee shall undertake the necessary plant modifications to eliminate these events.

c. The permittee shall calibrate all pressure gauges, flow meters, chart recorders, and other related equipment associated with the injection well system on a semi-annual basis. The permittee shall maintain all monitoring equipment and shall ensure that the monitoring equipment is calibrated and in proper operating condition at all times. Laboratory equipment, methods, and quality control will follow EPA guidelines as expressed in Standard Methods for the Examination of Water and Wastewater. The pressure gauges, flow meters, and chart recorders shall be calibrated using standard engineering methods. Calibration records shall be submitted to the Department with the monthly monitoring data.

d. In the event a well must be plugged or abandoned, the permittee shall obtain a permit from the Department as required by Chapter 17-28, Florida Administrative Code. When no longer used for their intended purpose, these wells shall be properly plugged and abandoned. Within 180 days of well abandonment, the permittee shall submit to the Department and the TAC the proposed plugging method, pursuant to Rule 17-28.350, F.A.C.

e. The permittee shall notify the Department and obtain approval prior to any well work or modification, including removal of the well head.

SPECIFIC CONDITIONS:

f. No underground injection is allowed which causes or allows movement of injected fluid into underground sources of drinking water.

2. TESTING AND REPORTING REQUIREMENTS

a. A specific injectivity test shall be performed quarterly on the injection well as required by Rule 17-28.260(2)(b), F.A.C. The specific injectivity test shall be performed with the pumping rate to the well set at a predetermined level and reported as the specific injectivity index (gallons per minute/specific pressure). The pumping rate to be used shall be based on the expected flow, the design of the pump types, and the type of pump control used. The specific injectivity test data shall be submitted along with the monitoring results of the injection and monitoring well data.

b. The permittee shall demonstrate the mechanical integrity pursuant to Rule 17-28.130(6)(b)2 and (c)2, Florida Administrative Code (F.A.C.), at least once every five (5) years during the life of the well. As part of the mechanical integrity survey a video television survey shall be conducted from the surface to the bottom of the injection zone or more frequently if deemed necessary by the Department, pursuant to Rule 17-28.250(1)(c), F.A.C. The last mechanical integrity test for injection well IW-1 was conducted on December 4, 1987. Therefore, he next mechanical integrity test on the injection well shall be completed on or before December 4, 1992.

c. The Department must be notified seventy-two (72) hours prior to all testing for mechanical integrity on the injection wells. The testing procedure must be approved by the Department before testing begins. All testing must be initiated during daylight hours, Monday through Friday. An evaluation of all test results must be submitted with all test data.

d. Injection Well

The injection well shall be monitored in accordance with F.A.C. Rule 17-28.260(2) and the frequency and the parameters listed below.

SPECIFIC CONDITIONS:

Parameters	Frequency
Monthly Average Injection Pressure (psig)	Monthly
Monthly Maximum Injection Pressure (psig)	Monthly
Monthly Minimum Injection Pressure (psig)	Monthly
Monthly Average Flow Rate (gpm)	Monthly
Monthly Maximum Flow Rate (gpm)	Monthly
Monthly Minimum Flow Rate (gpm)	Monthly
Daily Average Injection Pressure (psig)	Continuously
Daily Maximum Injection Pressure (psig)	Continuously
Daily Minimum Injection Pressure (psig)	Continuously
Daily Average Flow Rate (gpm)	Continuously
Daily Maximum Flow Rate (gpm)	Continuously
Daily Minimum Flow Rate (gpm)	Continuously
Total Volume Discharged (Gals)	Monthly
Total Volume Discharged (Gals)	Daily

e. (1) MONITOR WELL

The monitor well consists of one dual zone monitor well as listed below:

ON-SITE MONITOR WELL

Well Number	Casing Diameter/Depth (Inches/Feet)	Open Hole Interval (Feet)
MW-1 (Upper)	10.00/1318	1318-1422
MW-2 (Lower)	4.00/1930	1930-2004

(2) MONITORING WELL PARAMETERS

The monitoring parameters listed below shall be developed and reported for the monitor well listed above. The monitor well casings shall be evacuated of three (3) to five (5) well volumes prior to collection of the water sample for analysis. The volume of water evacuated shall be based on the calculated

SPECIFIC CONDITIONS:

volume of water in the well casing and sampling interval. The water sample collected shall be of sufficient volume to complete the analysis required. All samples must be analyzed by a laboratory certified in the State of Florida. The laboratory reports shall be submitted and shall include information required by General Condition 14C of this permit.

Monthly Average Pressure or Water Level (psig or ft)	Monthly
Monthly Maximum Pressure or Water Level (psig or ft)	Monthly
Monthly Minimum Pressure or Water Level (psig or ft)	Monthly
Daily Average Pressure or Water Level (psig or ft)	Continuously
Specific Conductance (umhos/cm)	Monthly
Chloride (mg/l)	Monthly
Total Dissolved Solids (T.D.S.) (mg/l)	Monthly
Sulfate (mg/l)	Monthly
Temperature (°C)	Monthly
Fecal Coliform (#/100 ml)	Monthly
$CBOD_5$ (mg/l)	Monthly
Total Phosphorus (mg/l)	Monthly
Total Nitrogen (as N) (mg/l)	Monthly
Ammonia Nitrogen (mg/l)	Monthly

f. The permittee shall submit to the Department the results of all injection well and monitor well data collected no later than the fifteenth (15) day of the month immediately following the end of the sampling period. The results shall be sent to the Department of Environmental Regulation, South District Office, 2295 Victoria Avenue, Fort Myers, Florida 33901-2896. Copies shall also be sent to the Department of Environmental Regulation, Underground Injection Control Section, Twin Towers Office Building, 2600 Blair Stone Road, Tallahassee, Florida 32399-2400.

g. In accordance with Chapter 17-4.090, F.A.C., Renewals, the permittee shall submit an application for renewal of the existing operating permit (a minimum of 5 copies) with the applicable fee sixty (60) days prior to the expiration of the operating permit. The application for renewal shall include a report documenting and summarizing the following activities:

SPECIFIC CONDITIONS:

1. Mechanical Integrity Testing;
2. Baseline Television Survey;
3. Specific Injectivity Tests;
4. Injection Well Monitoring Data, and
5. Monitor Well Data (presented in both graphic and tabular form).

3. EMERGENCY DISPOSAL

a. All applicable federal, state and local permits must be in place to allow for any alternate discharges due to emergency or planned outage conditions.

b. Any changes in emergency disposal methods must be submitted for Technical Advisory Committee (TAC) review and Department approval.

The well is the backup discharge mechanism for the Chapter 17-610 F.A.C. Part III reuse system. A 1.2 million gallon holding pond is also available for storage.

4. FINANCIAL RESPONSIBILITY

a. The permittee shall maintain the resources necessary to close, plug, and abandon the injection and associated monitor wells, at all times (Rule 17-28.270(9), F.A.C.).

b. The permittee shall review annually the plugging and abandonment cost estimates. An increase in any one year shall require the permittee to submit documentation to obtain an updated Certificate of Demonstration of Financial Responsibility.

c. In the event that the mechanism used to demonstrate financial responsibility should become invalid for any reason, the permittee shall notify the Department of Environmental Regulation in writing within 14 days of such invalidation. The permittee shall then within 30 days of said notification submit to the Department for approval new financial documentation in order to comply with Rule 17-28.270(9), F.A.C., and the conditions of this permit.

PERMITTEE:
Ray Dixon, Jr., V.P.
North Fort Myers Utility, Inc.

I.D.No: 5236P00249
Permit/Cert.No.: U036-191266
Date of Issue: April 17, 1992
Expiration Date: April 17, 1997

SPECIFIC CONDITIONS:

5. The permittee is reminded of the necessity to comply with the pertinent regulations of any other regulatory agency, as well as any county, municipal, and federal regulations applicable to the project. These regulations may include, but are not limited to, those of the Federal Emergency Management Agency in implementing flood control measures. This permit should not be construed to imply compliance with the rules and regulations of other regulatory agencies.

Note: In the event of an emergency the permittee shall contact the Department by calling (904) 488-1320. During normal business hours, the permittee shall call (813) 332-6975.

Issued this 17th day of April, 1992

STATE OF FLORIDA DEPARTMENT
OF ENVIRONMENTAL REGULATION

Philip R. Edwards
Director of
District Management

PRE/VNM/dd