YOUNGQUIST BROTHERS, Inc
GEOPHYSICAL LOGGING DIVISION

FLOWMETER LOG

Company	PALM BEACH COUNTY
Well	IW #1
Field	LAKE REGION
County	PALM BEACH
State	FLORIDA

Company	PALM BEACH COUNTY WATER UTIL.
Well	DEEP INJECTION WELL #1
Field	LAKE REGION
County	PALM BEACH
State	FLORIDA

Location

Other Services
SEE
COMMENTS

			Elevation
Permanent Datum	PAD	Elevation	K.B.
Log Measured From	PAD		D.F.
Drilling Measured From	PAD		G.L.

Date	APRIL-4-06		
Run Number	EIGHT	BRIDGE PLUG	
Depth Driller	3500'	2955'	
Depth Logger	3500'	2955'	
Bottom Logged Interval	CASING		
Top Log Interval	SURFACE		
Open Hole Size	12.25"		
Type Fluid	WATER		
Density / Viscosity	NA		
Max. Recorded Temp.	NA		
Estimated Cement Top	NA		
Time Well Ready	ON ARRIVAL		
Time Logger on Bottom	1800		
Equipment Number	103		
Location	FT.MYERS		
Recorded By	GOODWIN	CATHEY	LEE
Witnessed By	J. WILLIS		

Borehole Record				Tubing Record			
Run Number	Bit	From	To	Size	Weight	From	To
ONE	58.5"	SURFACE	192'	FIVE	34.5"	CASING	1925'
TWO	46"	SURFACE	847'				
THREE	12.25"	CASING	1915'				
FOUR	12.25"	CASING	1964'				

Casing Record	Size	Wgt/Ft	Top	Bottom
Surface String	48"	.375 W.T.	SURFACE	188'
Prot. String	36"	.375 W.T	SURFACE	846'
Production String	28"	.375" W.T.	SURFACE	1920'
Liner				

<<< Fold Here >>>

All interpretations are opinions based on inferences from electrical or other measurements and we cannot and do not guarantee the accuracy or correctness of any interpretation, and we shall not, except in the case of gross or willful negligence on our part, be liable or responsible for any loss, costs, damages, or expenses incurred or sustained by anyone resulting from any interpretation made by any of our officers, agents or employees. These interpretations are also subject to our general terms and conditions set out in our current Price Schedule.

Comments

X-Y CALIPER GAMMA RAY
DUAL INDUCTION
BOREHOLE COMPENSATED SONIC
FLUID CONDUCTIVITY/TEMPERATURE
BHTV

YOUNGQUIST
BROTHERS, Inc
GEOPHYSICAL LOGGING DIVISION

FLOWRATE = 260 GPM

Database File:	belleiw1.db
Dataset Pathname:	run8/pass11
Presentation Format:	FM_DNMG
Dataset Creation:	Wed Apr 05 23:39:50 2006 by Log 6.2_B4
Charted by:	Depth in Feet scaled 1:240

0 L.S STATIC DOWN (ft/min) -100
0 L.S DYNAMIC DOWN (ft/min) 100
10 XCAL (in) 30

0 DYNAMIC DOWN FLOW (cps) 60
0 STATIC DOWN FLOW (cps) 60

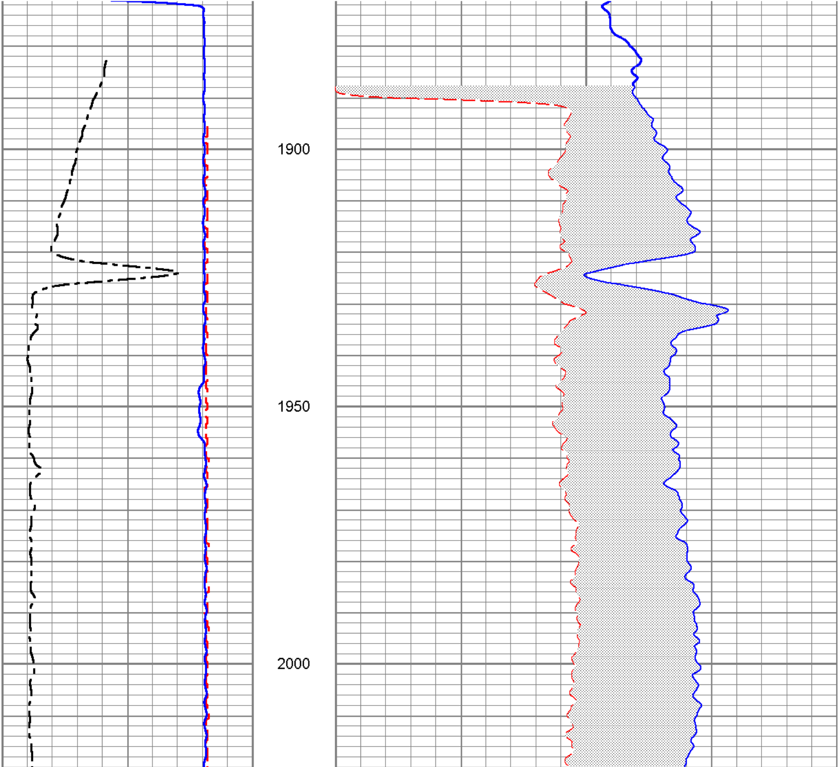

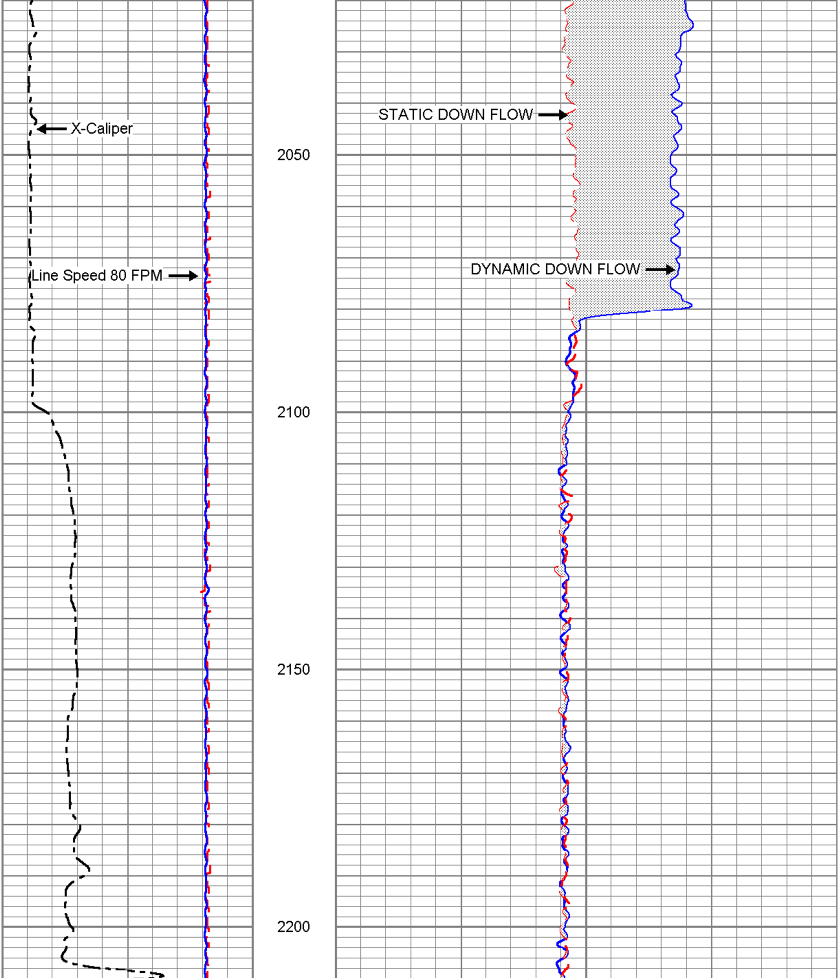

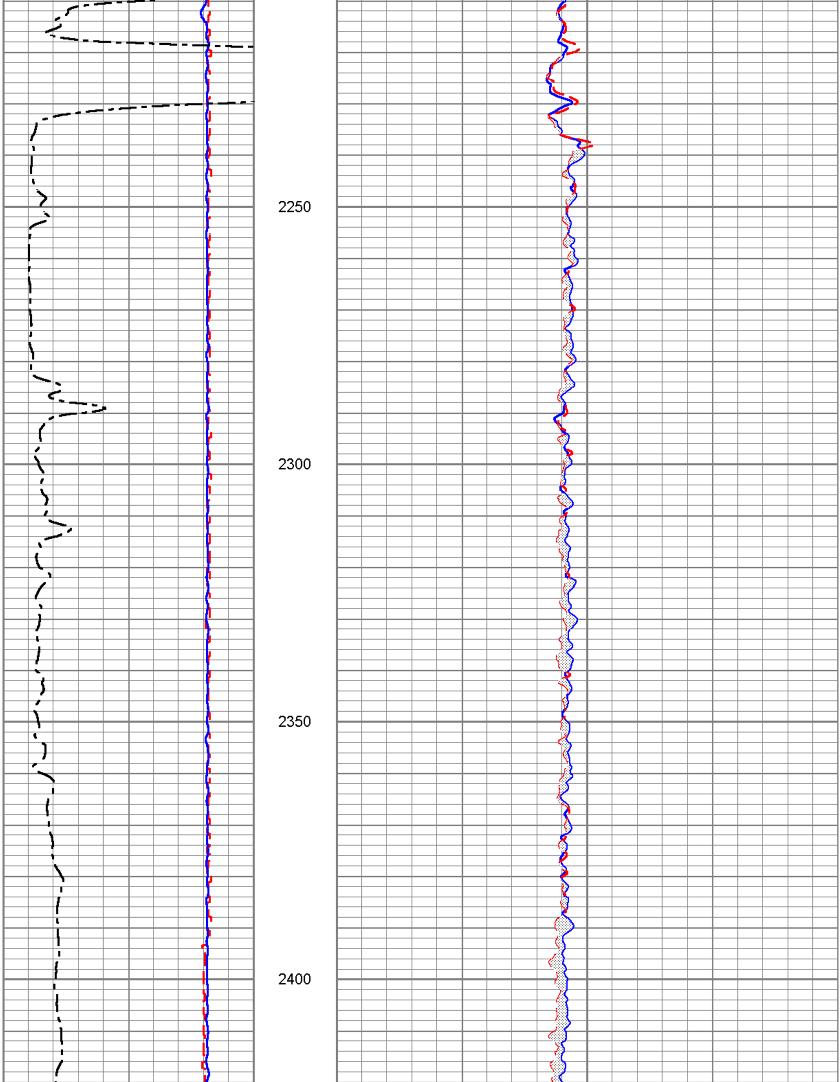

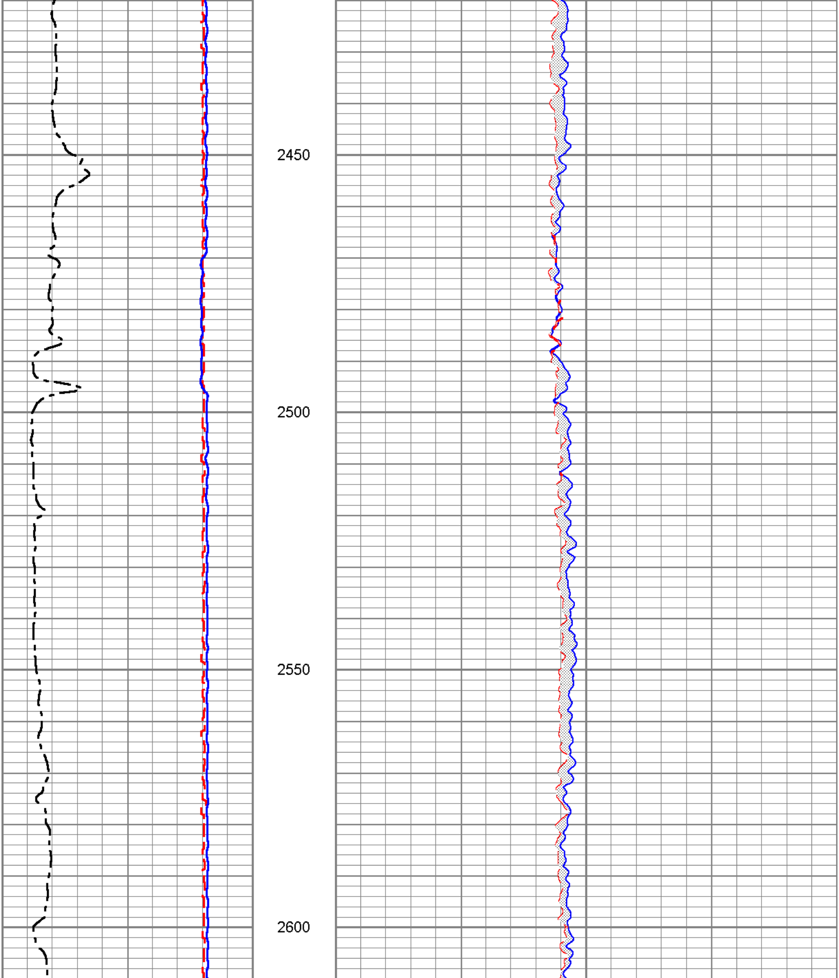

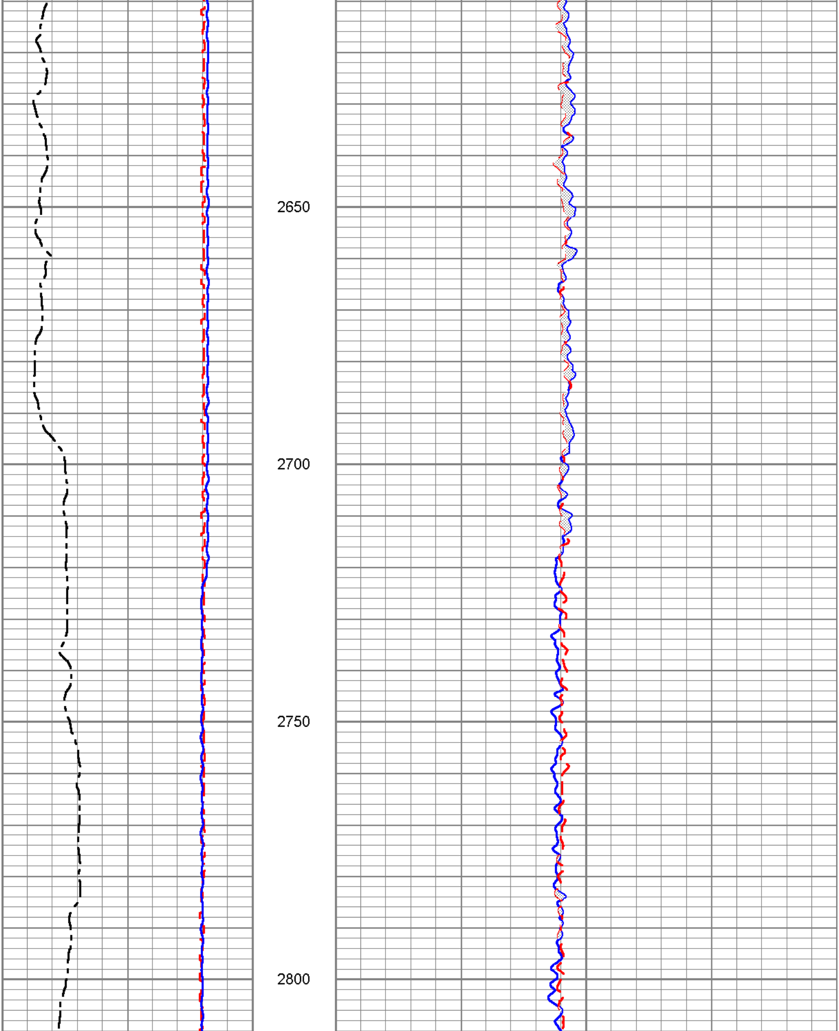

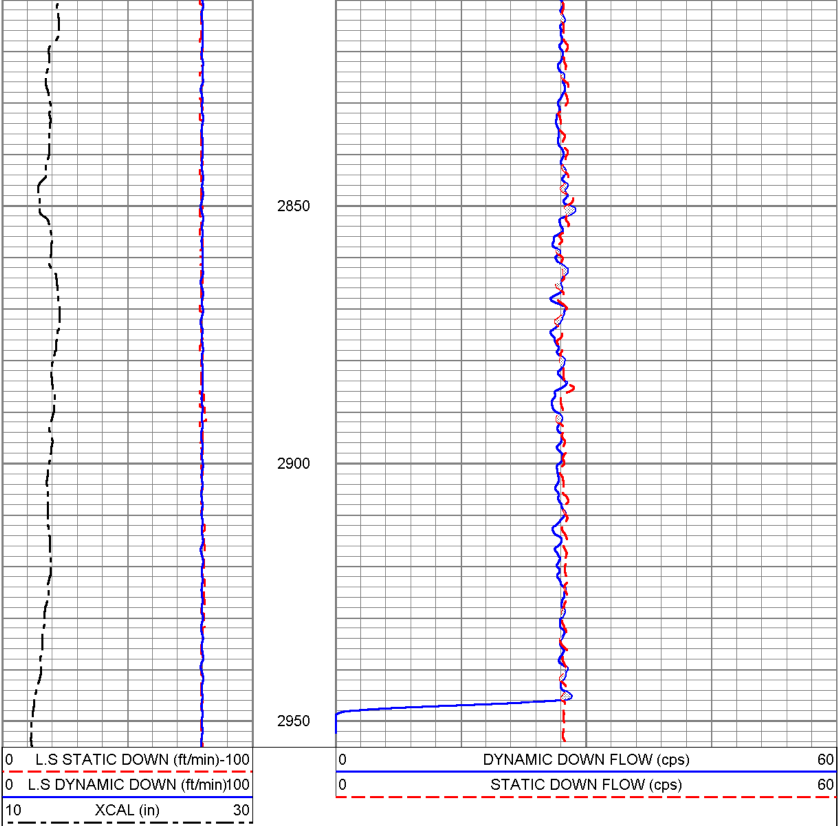

YOUNGQUIST
BROTHERS, Inc
GEOPHYSICAL LOGGING DIVISION

FLOWCALS 60,80,100 FPM

Database File: belleiw1.db
Dataset Pathname: run8/pass10
Presentation Format: FLOWCALS
Dataset Creation: Wed Apr 05 01:58:16 2006 by Log 6.2_B4
Charted by: Depth in Feet scaled 1:240

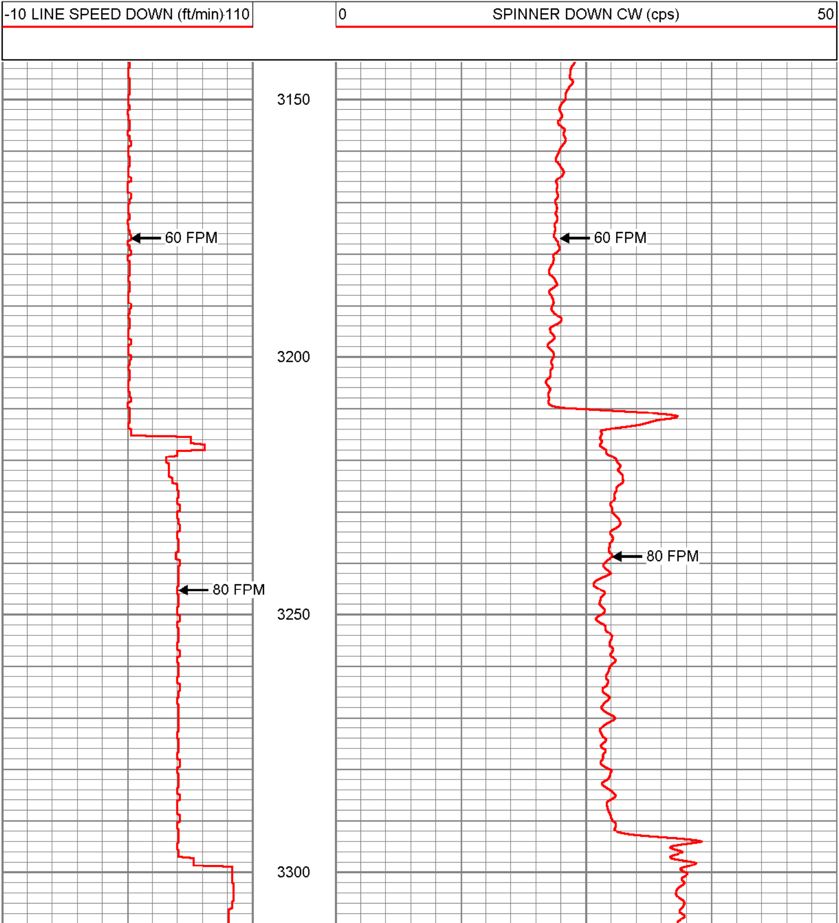

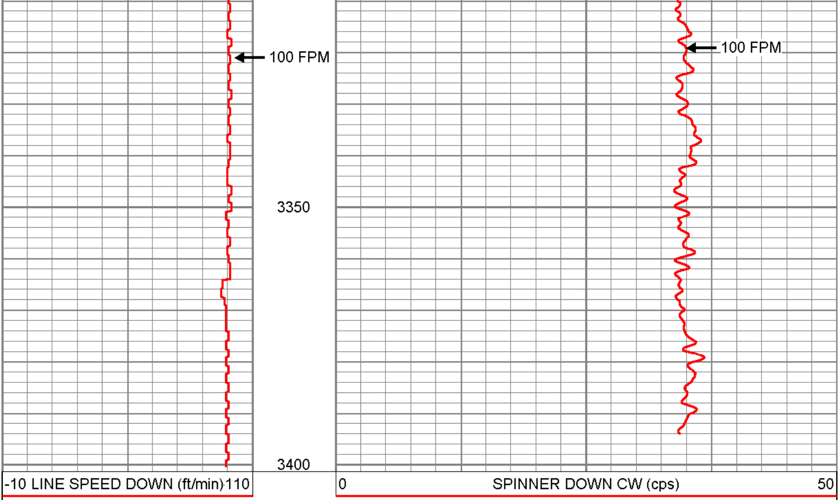

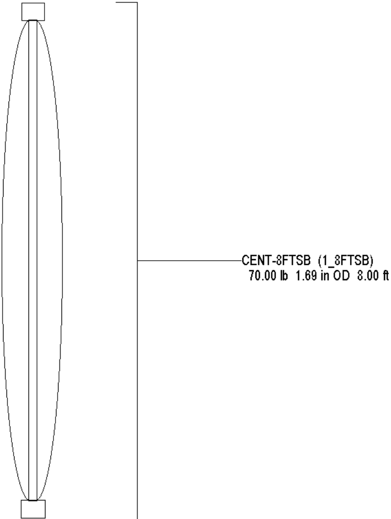

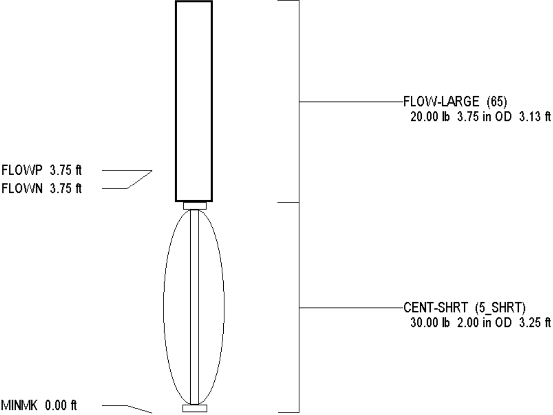

Dataset:	run8/pass11
Total Length:	14.38 ft
Total Weight:	120.00 lb
O.D.	3.75 in