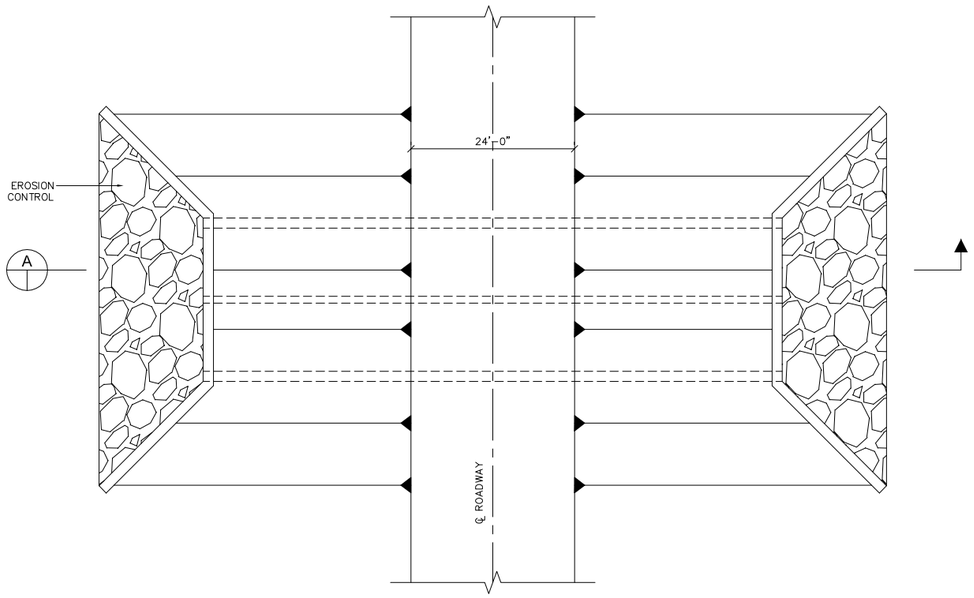

PLAN (DOUBLE BOX CULVERT)
SCALE: 1" = 10'

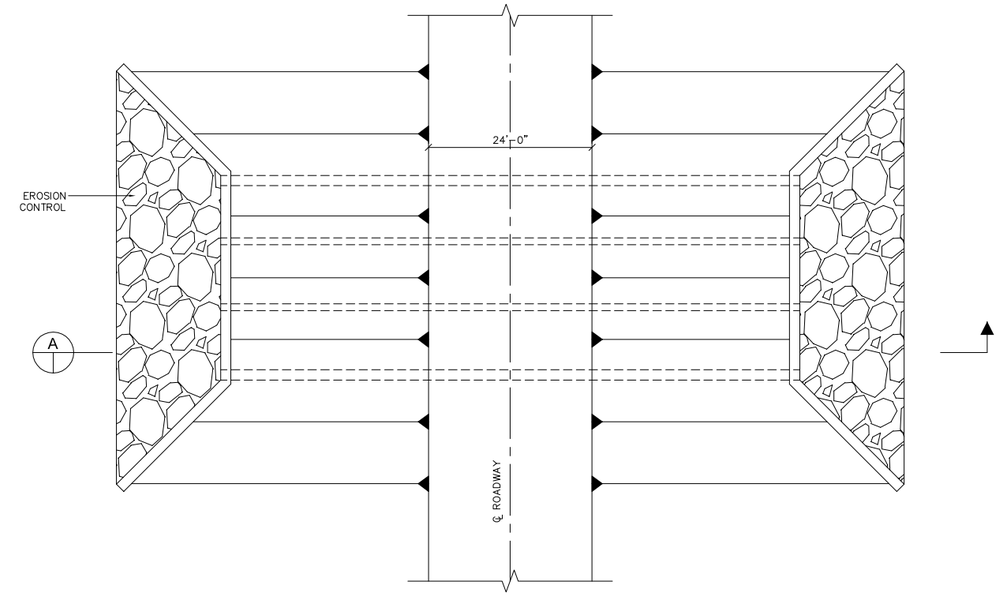

PLAN (TRIPLE BOX CULVERT)
SCALE: 1" = 10'

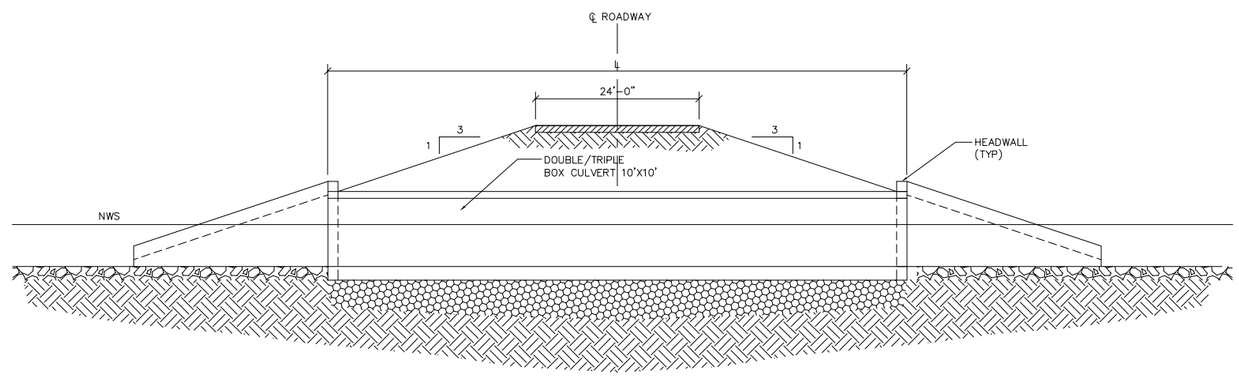

SECTION A
SCALE: 1" = 10'

ROADWAY	CULVERT	NUMBER OF BARRELS	INVERT ELEV.	L (LENGTH)
ACCESS ROAD FOR TCR INLET	TCR-S8	2	11.5	85 FT.
ACCESS ROAD FOR TCR OUTLET	TCR-S9	3	17	85 FT.
COUNTY ROUTE 15B	S191D-S11	2	10	85 FT.
STATE ROUTE 15/US 98	LRSTA-S13	3	10	85 FT.

NOTE:
ALL BOX CULVERTS ARE PRECAST.

CDM
Camp Dresser & McKee,
1601 Belvedere Road, Suite 211 South
West Palm Beach, FL 33406
Tel: (561) 689-3336
FL COA No. EB-0000020
consulting • engineering • construction • operations

R.C.T. ENGINEERING, INC.
CONSULTING ENGINEERS • PROGRAM MANAGERS
203 Northpoint Parkway, Suite 300, West Palm Beach, FL 33407
(561) 684-1191 FAX: 684-2801 www.rctengineering.com

ENGINEER OF RECORD:
FL. ENGINEERING CERTIFICATE NO.:
DATE:

REV #	REVISION DESCRIPTION

DATE	DRAWN

ENGINEER: WBK
DRAWN: JWJ
CHECKED: RMC
DATE: OCTOBER 2006
SCALE:

SOUTH FLORIDA WATER MANAGEMENT DISTRICT
PHONE: 561-686-8800
3301 GUN CLUB ROAD
WEST PALM BEACH, FLORIDA 33406

LOFT PROJECT
ROADWAY CULVERTS
PLAN AND SECTION

CONTRACT NO.
PROJECT ID NO.
SHEET
FIG 15-8

L:\PBI05117 Lake Okeechobee Reservoir\CAD\Design\CAD\PRELIMINARY\REVISED SUBMITTAL\S-DWGS.dwg – Wednesday, October 25, 2006 11:35:57 AM